1979 Ford Motor Co.

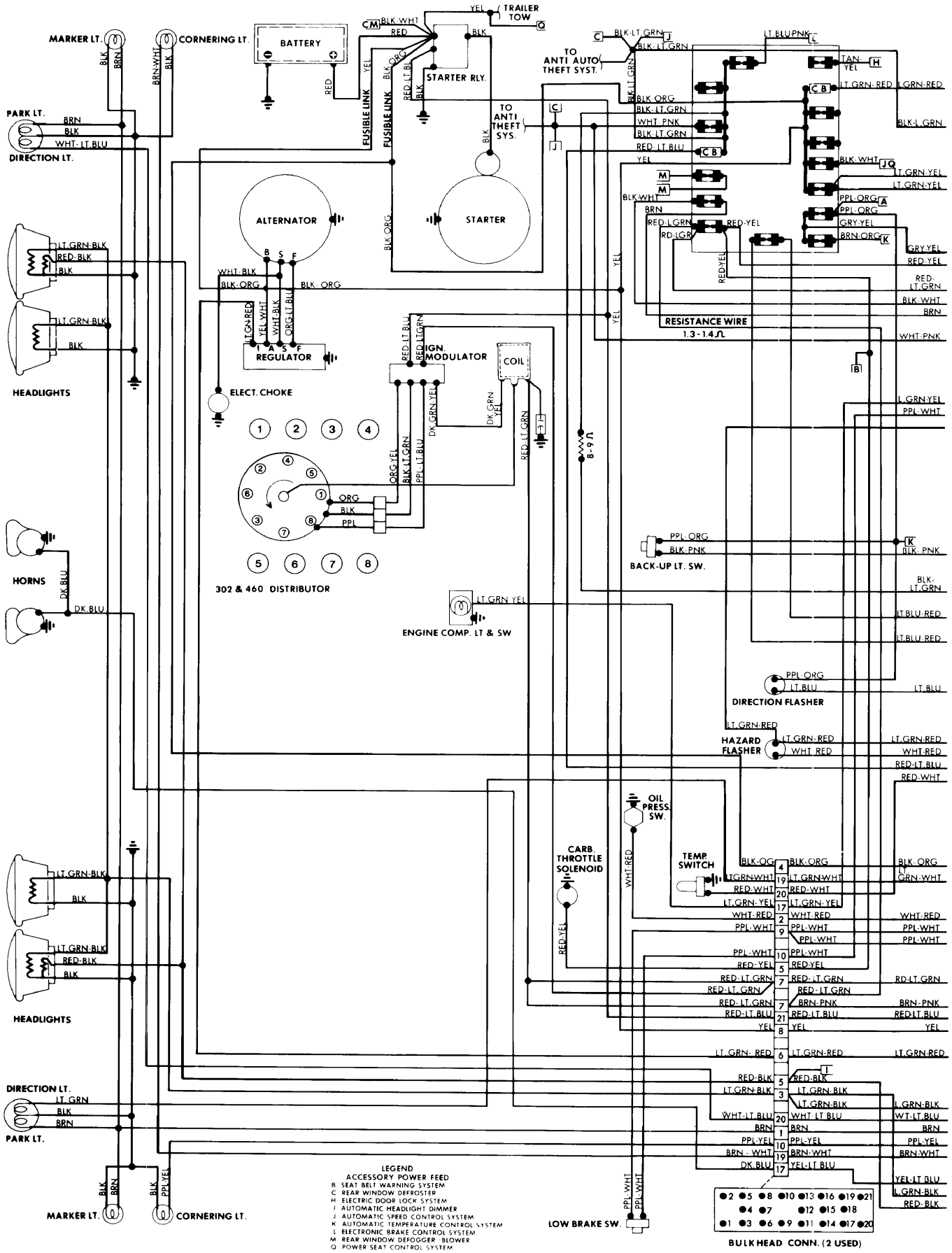

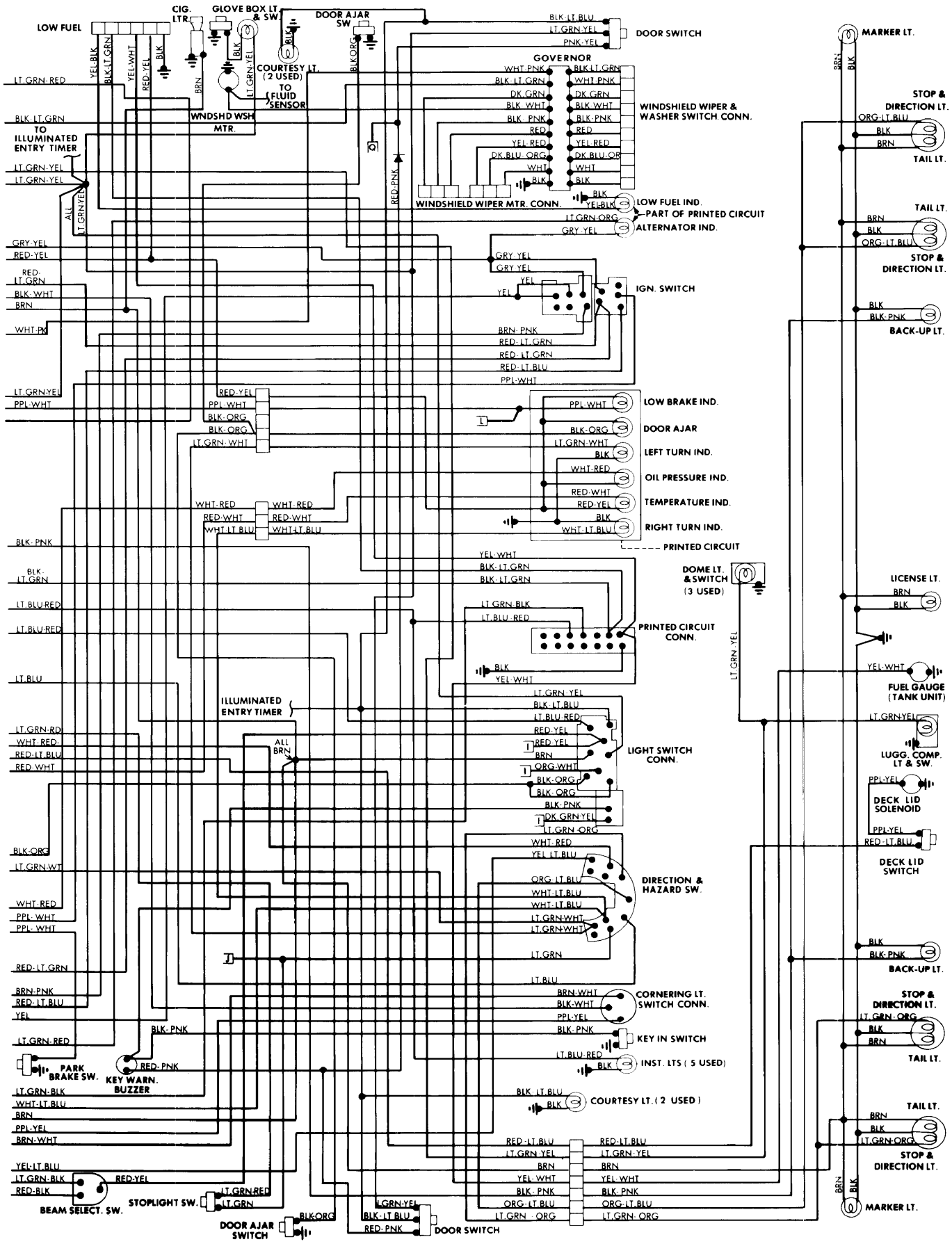
LOW FUEL
CIG. LTR.
GLOVE BOX LT. & SW.
DOOR AJAR SW
COURTESY LT. (2 USED)
TO FLUID SENSOR
WNDSHD WSH MTR.
TO ILLUMINATED ENTRY TIMER
GOVERNOR
DOOR SWITCH
WINDSHIELD WIPER & WASHER SWITCH CONN.
WINDSHIELD WIPER MTR. CONN.
LOW FUEL IND.
PART OF PRINTED CIRCUIT
ALTERNATOR IND.
IGN. SWITCH
LOW BRAKE IND.
DOOR AJAR
LEFT TURN IND.
OIL PRESSURE IND.
TEMPERATURE IND.
RIGHT TURN IND.
PRINTED CIRCUIT
DOME LT. & SWITCH (3 USED)
PRINTED CIRCUIT CONN.
ILLUMINATED ENTRY TIMER
LIGHT SWITCH CONN.
DIRECTION & HAZARD SW.
CORNERING LT. SWITCH CONN.
KEY IN SWITCH
INST. LTS (5 USED)
COURTESY LT. (2 USED)
PARK BRAKE SW.
KEY WARN. BUZZER
BEAM SELECT. SW.
STOPLIGHT SW.
DOOR AJAR SWITCH
DOOR SWITCH
MARKER LT.
STOP & DIRECTION LT.
TAIL LT.
BACK-UP LT.
LICENSE LT.
FUEL GAUGE (TANK UNIT)
LUGG. COMP. LT & SW.
DECK LID SOLENOID
DECK LID SWITCH