1979 Ford Motor Co.

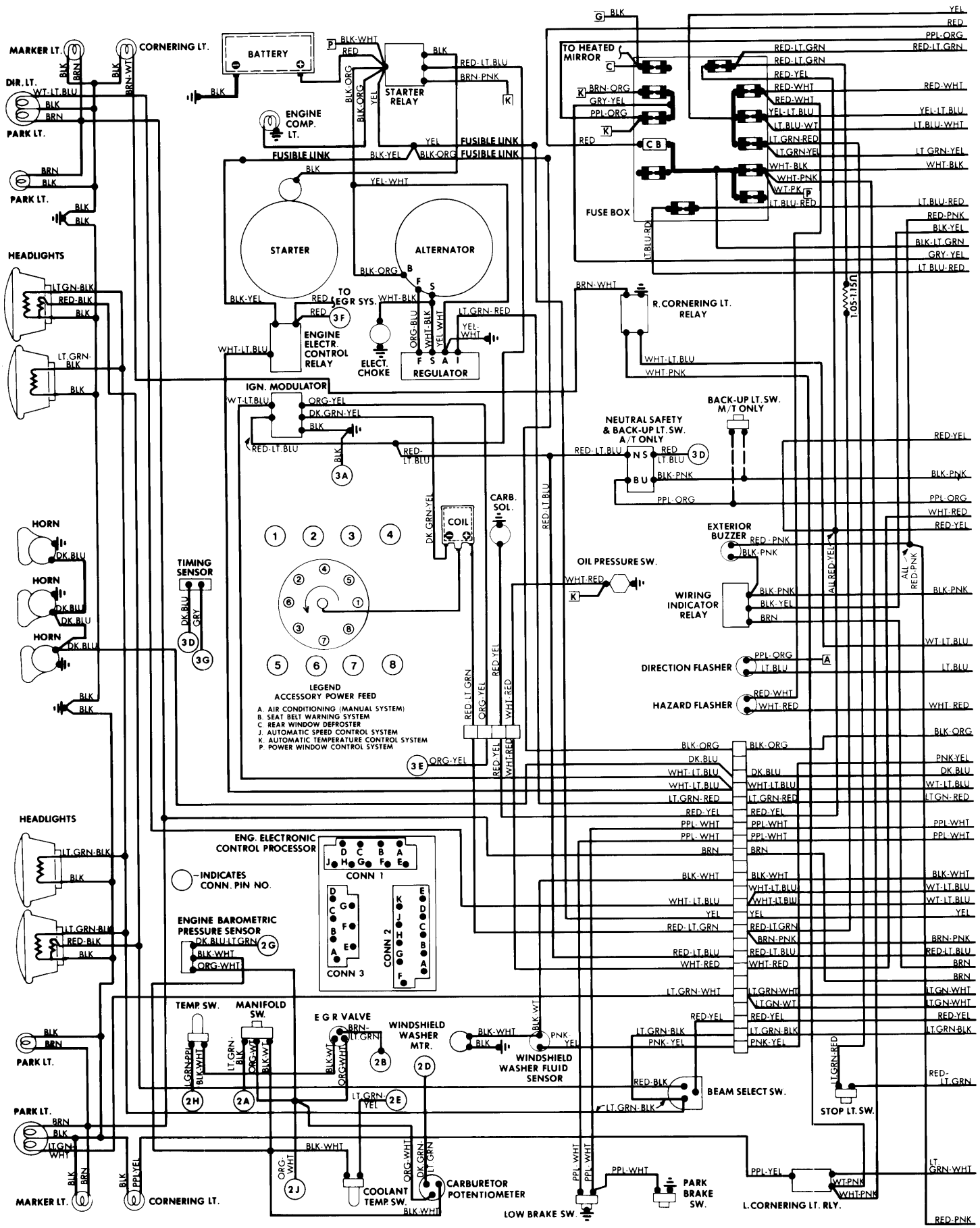

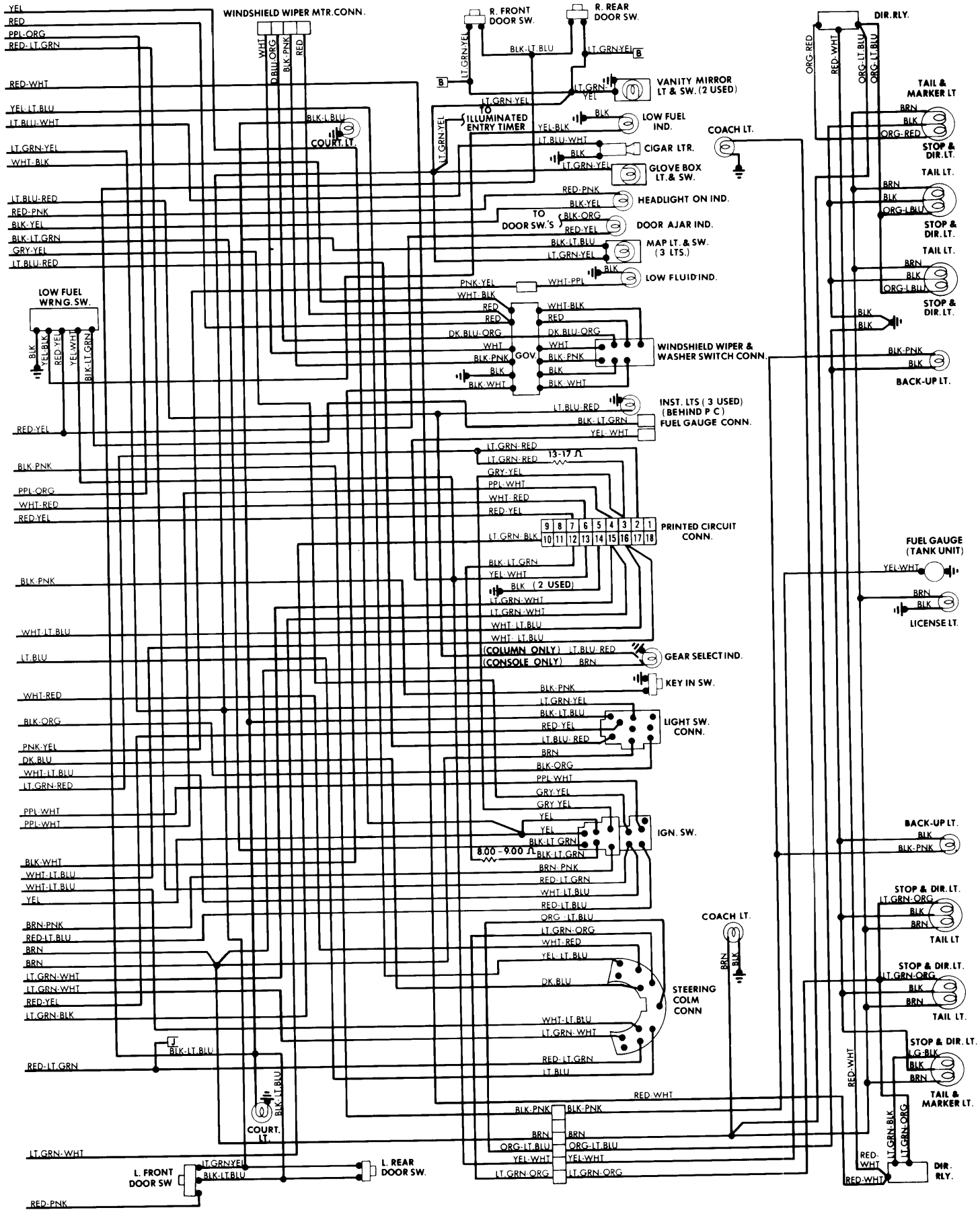
WINDSHIELD WIPER MTR. CONN.
R. FRONT DOOR SW.
R. REAR DOOR SW.
DIR. RLY.
VANITY MIRROR LT & SW. (2 USED)
TO ILLUMINATED ENTRY TIMER
LOW FUEL IND.
COURT. LT.
CIGAR LTR.
GLOVE BOX LT. & SW.
COACH LT.
TAIL & MARKER LT
STOP & DIR. LT.
TAIL LT.
HEADLIGHT ON IND.
TO DOOR SW.'S
DOOR AJAR IND.
MAP LT. & SW. (3 LTS.)
LOW FLUID IND.
LOW FUEL WRNG. SW.
WINDSHIELD WIPER & WASHER SWITCH CONN.
GOV.
BACK-UP LT.
INST. LTS (3 USED) (BEHIND P C)
FUEL GAUGE CONN.
13-17 Ω
PRINTED CIRCUIT CONN.
FUEL GAUGE (TANK UNIT)
LICENSE LT.
(2 USED)
(COLUMN ONLY)
(CONSOLE ONLY)
GEAR SELECT IND.
KEY IN SW.
LIGHT SW. CONN.
IGN. SW.
8.00 - 9.00 Ω
STEERING COLM CONN
L. FRONT DOOR SW
L. REAR DOOR SW.