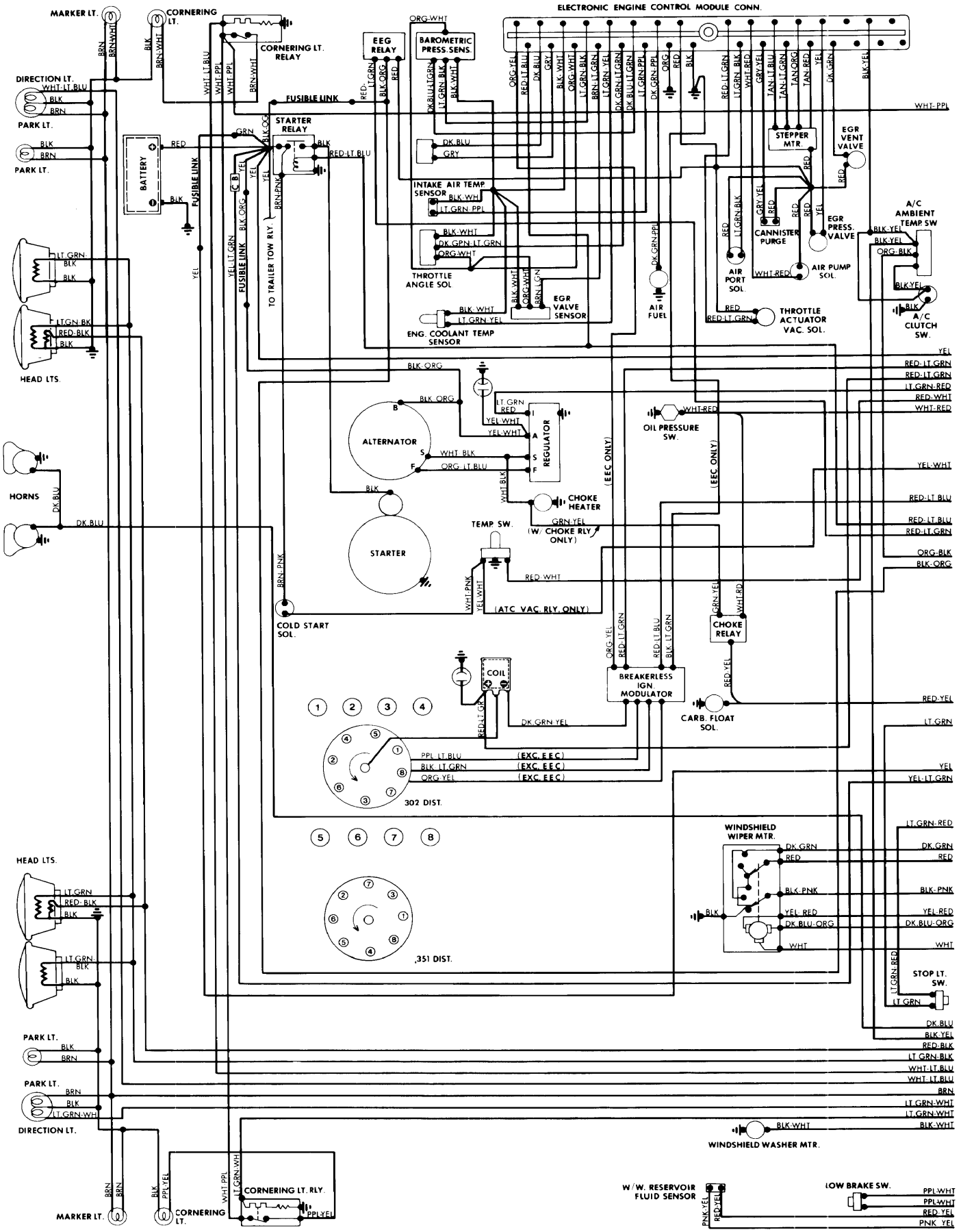
MARKER LT.
CORNERING LT.
CORNERING LT. RELAY
EEG RELAY
BAROMETRIC PRESS. SENS.
ELECTRONIC ENGINE CONTROL MODULE CONN.
DIRECTION LT.
PARK LT.
FUSIBLE LINK
STARTER RELAY
BATTERY
STEPPER MTR.
EGR VENT VALVE
INTAKE AIR TEMP SENSOR
CANNISTER PURGE
EGR PRESS. VALVE
A/C AMBIENT TEMP. SW
AIR PUMP SOL.
AIR PORT SOL.
THROTTLE ANGLE SOL
EGR VALVE SENSOR
AIR FUEL
THROTTLE ACTUATOR VAC. SOL.
ENG. COOLANT TEMP SENSOR
A/C CLUTCH SW.
HEAD LTS.
TO TRAILER TOW RLY.
ALTERNATOR
REGULATOR
OIL PRESSURE SW.
(EEC ONLY)
HORNS
CHOKE HEATER
TEMP. SW.
(W/ CHOKE RLY ONLY)
STARTER
(ATC VAC. RLY. ONLY)
COLD START SOL.
CHOKE RELAY
COIL
BREAKERLESS IGN. MODULATOR
CARB. FLOAT SOL.
302 DIST.
(EXC. EEC)
WINDSHIELD WIPER MTR.
,351 DIST.
STOP LT. SW.
WINDSHIELD WASHER MTR.
CORNERING LT. RLY.
W/W. RESERVOIR FLUID SENSOR
LOW BRAKE SW.

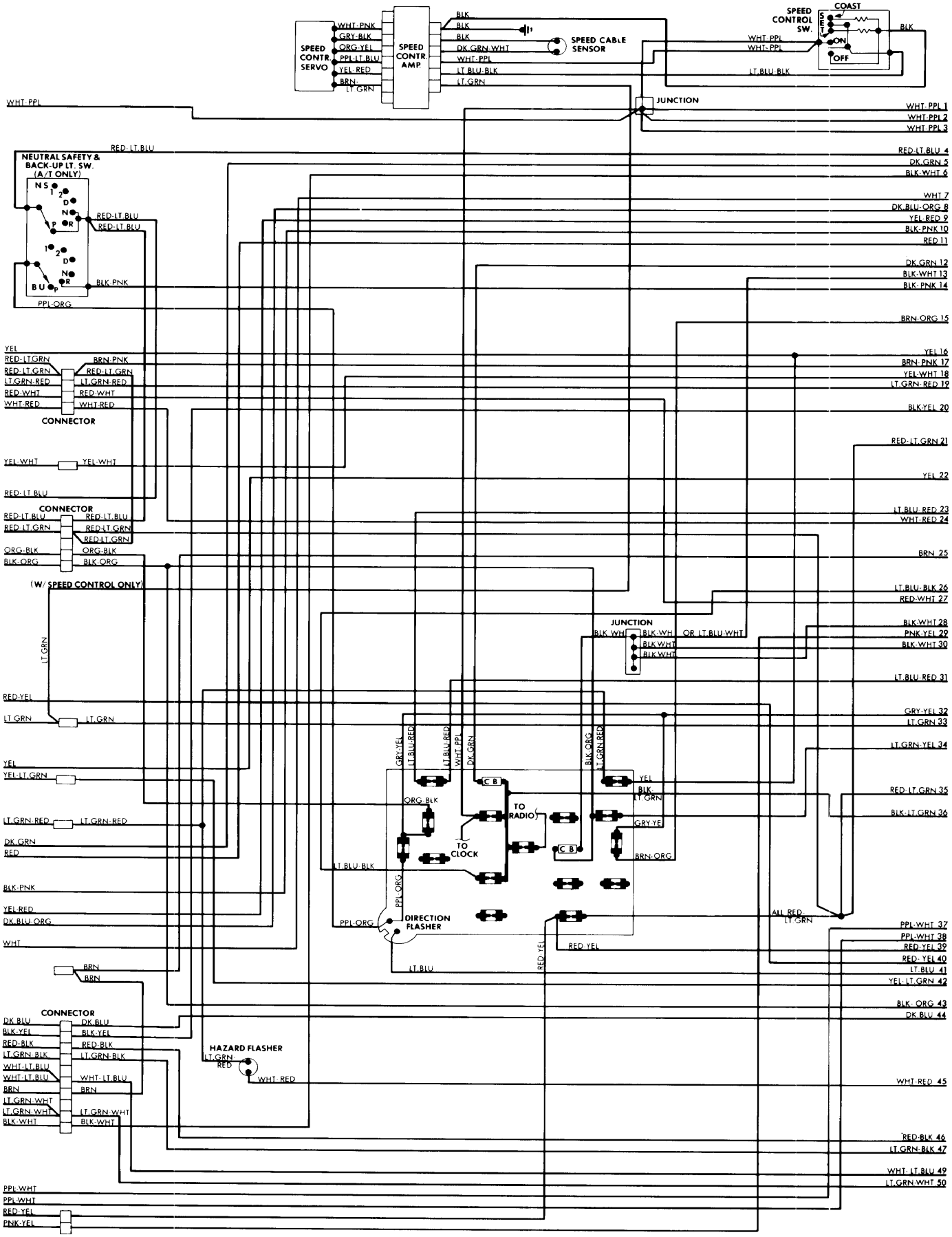
SPEED CONTR. SERVO
WHT-PNK
GRY-BLK
ORG-YEL
PPL-LT.BLU
YEL-RED
BRN-LT.GRN
SPEED CONTR. AMP.
BLK
BLK
BLK
DK.GRN-WHT
WHT-PPL
LT.BLU-BLK
LT.GRN
SPEED CABLE SENSOR
SPEED CONTROL SW.
COAST
SET
ON
OFF
WHT-PPL
WHT-PPL
LT.BLU-BLK
BLK
JUNCTION
WHT-PPL
WHT-PPL 1
WHT-PPL 2
WHT-PPL 3
NEUTRAL SAFETY & BACK-UP LT. SW. (A/T ONLY)
RED-LT.BLU
RED-LT.BLU
RED-LT.BLU
RED-LT.BLU 4
DK.GRN 5
BLK-WHT 6
WHT 7
DK.BLU-ORG 8
YEL-RED 9
BLK-PNK 10
RED 11
BLK-PNK
PPL-ORG
DK.GRN 12
BLK-WHT 13
BLK-PNK 14
BRN-ORG 15
YEL
RED-LT.GRN
RED-LT.GRN
LT.GRN-RED
RED-WHT
WHT-RED
BRN-PNK
RED-LT.GRN
LT.GRN-RED
RED-WHT
WHT-RED
CONNECTOR
YEL 16
BRN-PNK 17
YEL-WHT 18
LT.GRN-RED 19
BLK-YEL 20
YEL-WHT
YEL-WHT
RED-LT.GRN 21
YEL 22
RED-LT.BLU
CONNECTOR
RED-LT.BLU
RED-LT.GRN
ORG-BLK
BLK-ORG
RED-LT.BLU
RED-LT.GRN
RED-LT.GRN
ORG-BLK
BLK-ORG
LT.BLU-RED 23
WHT-RED 24
BRN 25
(W/ SPEED CONTROL ONLY)
LT.BLU-BLK 26
RED-WHT 27
JUNCTION
BLK-WHT
BLK-WHT
BLK-WHT
BLK-WHT
OR LT.BLU-WHT
BLK-WHT 28
PNK-YEL 29
BLK-WHT 30
LT.GRN
LT.BLU-RED 31
RED-YEL
LT.GRN
LT.GRN
GRY-YEL 32
LT.GRN 33
LT.GRN-YEL 34
YEL
YEL-LT.GRN
GRY-YEL
LT.BLU-RED
LT.BLU-RED
WHT-PPL
DK.GRN
BLK-ORG
LT.GRN-RED
C B
YEL
BLK
LT.GRN
RED-LT.GRN 35
BLK-LT.GRN 36
LT.GRN-RED
LT.GRN-RED
ORG-BLK
TO RADIO
GRY-YEL
DK.GRN
RED
TO CLOCK
C B
BRN-ORG
LT.BLU-BLK
BLK-PNK
PPL-ORG
YEL-RED
DK.BLU-ORG
PPL-ORG
DIRECTION FLASHER
ALL RED
LT.GRN
WHT
PPL-WHT 37
PPL-WHT 38
RED-YEL 39
RED-YEL 40
LT.BLU 41
YEL-LT.GRN 42
BRN
BRN
RED-YEL
RED-YEL
LT.BLU
BLK-ORG 43
DK.BLU 44
CONNECTOR
DK.BLU
BLK-YEL
RED-BLK
LT.GRN-BLK
WHT-LT.BLU
WHT-LT.BLU
BRN
LT.GRN-WHT
LT.GRN-WHT
BLK-WHT
DK.BLU
BLK-YEL
RED-BLK
LT.GRN-BLK
WHT-LT.BLU
BRN
LT.GRN-WHT
BLK-WHT
HAZARD FLASHER
LT.GRN-RED
WHT-RED
WHT-RED 45
RED-BLK 46
LT.GRN-BLK 47
WHT-LT.BLU 49
LT.GRN-WHT 50
PPL-WHT
PPL-WHT
RED-YEL
PNK-YEL

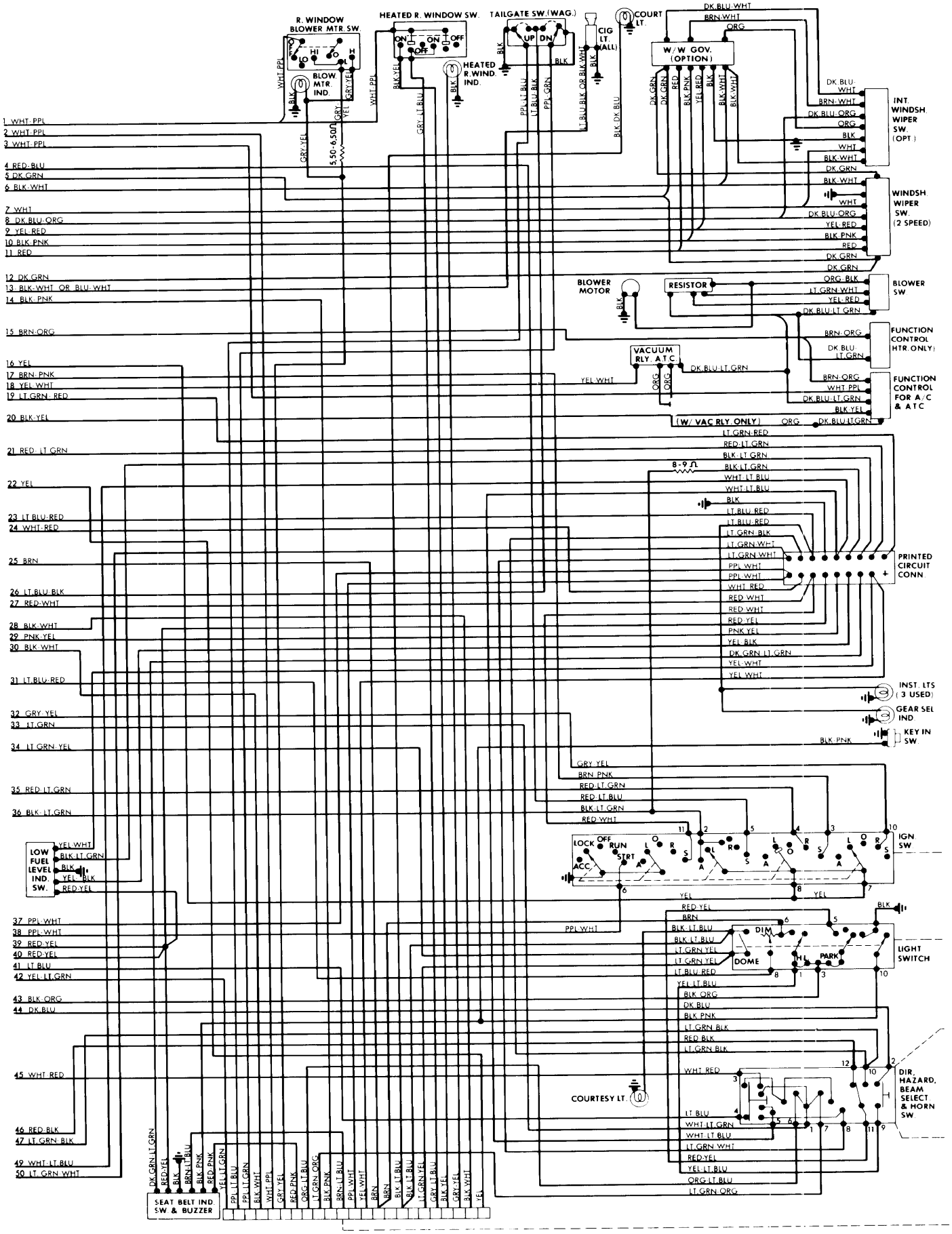
R. WINDOW BLOWER MTR. SW.
HEATED R. WINDOW SW.
TAILGATE SW. (WAG.)
COURT LT.
CIG LT. (ALL)
W/W GOV. (OPTION)
BLOW. MTR. IND.
HEATED R. WIND. IND.
INT. WINDSH. WIPER SW. (OPT.)
WINDSH. WIPER SW. (2 SPEED)
BLOWER MOTOR
RESISTOR
BLOWER SW.
FUNCTION CONTROL HTR. ONLY)
VACUUM RLY. A.T.C.
FUNCTION CONTROL FOR A/C & ATC
(W/ VAC RLY. ONLY)
PRINTED CIRCUIT CONN.
INST. LTS (3 USED)
GEAR SEL IND.
KEY IN SW.
IGN. SW.
LOW FUEL LEVEL IND. SW.
LIGHT SWITCH
DIR. HAZARD, BEAM SELECT & HORN SW.
COURTESY LT.
SEAT BELT IND. SW. & BUZZER

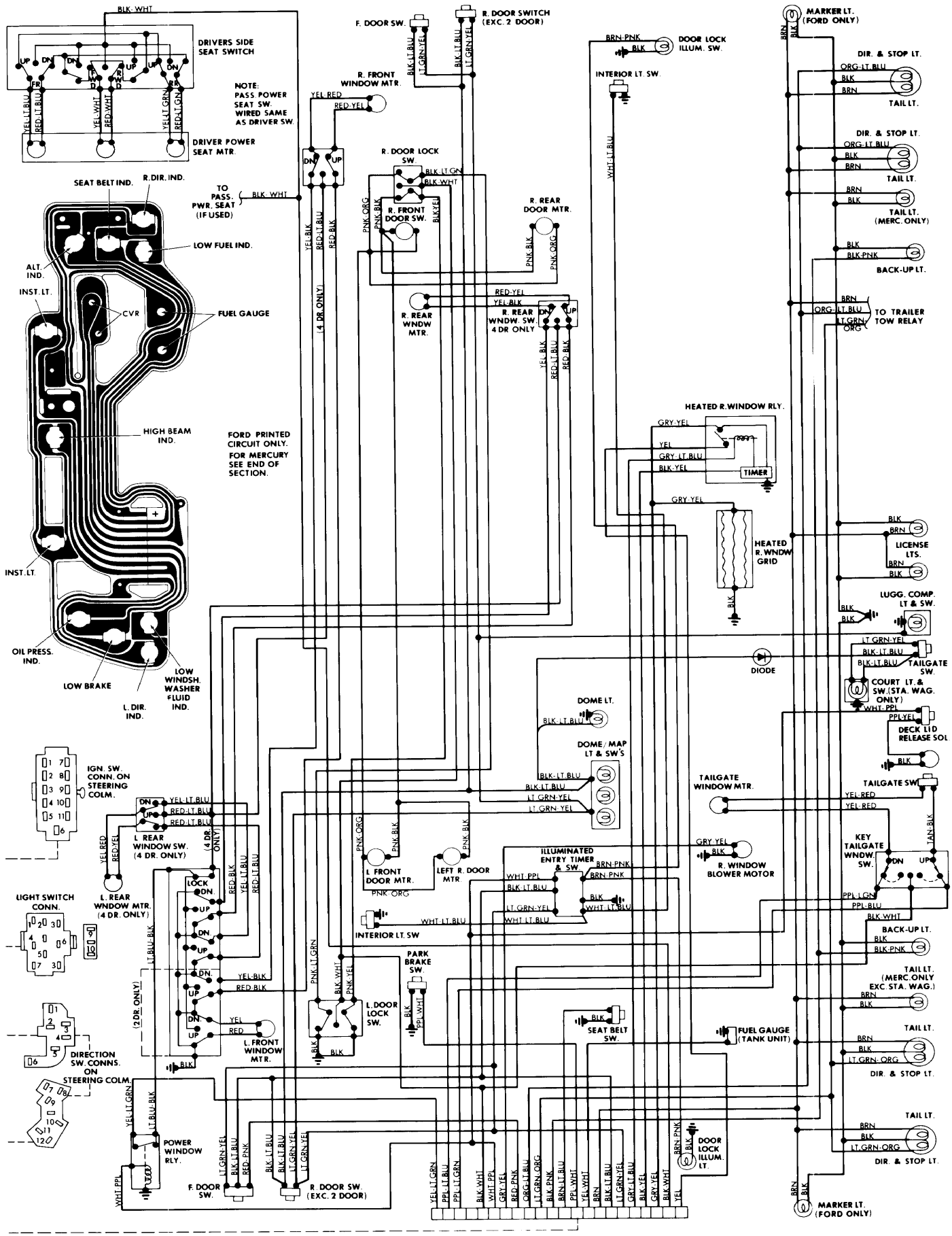
DRIVERS SIDE SEAT SWITCH
NOTE: PASS POWER SEAT SW. WIRED SAME AS DRIVER SW.
DRIVER POWER SEAT MTR.
SEAT BELT IND.
R.DIR. IND.
TO PASS. PWR. SEAT (IF USED)
LOW FUEL IND.
ALT. IND.
INST. LT.
CVR
FUEL GAUGE
HIGH BEAM IND.
FORD PRINTED CIRCUIT ONLY.
FOR MERCURY SEE END OF SECTION.
INST. LT.
OIL PRESS. IND.
LOW BRAKE
L. DIR. IND.
LOW WINDSH. WASHER FLUID IND.
IGN. SW. CONN. ON STEERING COLM.
L REAR WINDOW SW. (4 DR. ONLY)
L. REAR WNDOW MTR. (4 DR. ONLY)
LIGHT SWITCH CONN.
DIRECTION SW. CONNS. ON STEERING COLM.
POWER WINDOW RLY.
F. DOOR SW.
R. DOOR SW. (EXC. 2 DOOR)
R. DOOR SWITCH (EXC. 2 DOOR)
R. FRONT WINDOW MTR.
R. DOOR LOCK SW.
R. FRONT DOOR SW.
R. REAR DOOR MTR.
R. REAR WNDW MTR.
R. REAR WNDW. SW. 4 DR ONLY
L FRONT DOOR MTR.
LEFT R. DOOR MTR.
L. FRONT WINDOW MTR.
L. DOOR LOCK SW.
PARK BRAKE SW.
INTERIOR LT. SW
DOME LT.
DOME/MAP LT & SW'S
ILLUMINATED ENTRY TIMER & SW.
SEAT BELT SW.
DOOR LOCK ILLUM. LT.
DOOR LOCK ILLUM. SW.
INTERIOR LT. SW.
HEATED R.WINDOW RLY.
TIMER
HEATED R.WNDW GRID
DIODE
TAILGATE WINDOW MTR.
R. WINDOW BLOWER MOTOR
FUEL GAUGE (TANK UNIT)
MARKER LT. (FORD ONLY)
DIR. & STOP LT.
TAIL LT.
TAIL LT. (MERC. ONLY)
BACK-UP LT.
TO TRAILER TOW RELAY
LICENSE LTS.
LUGG. COMP. LT & SW.
TAILGATE SW.
COURT LT. & SW. (STA. WAG. ONLY)
DECK LID RELEASE SOL.
TAILGATE SW
KEY TAILGATE WNDW. SW.
TAIL LT. (MERC. ONLY EXC. STA. WAG.)