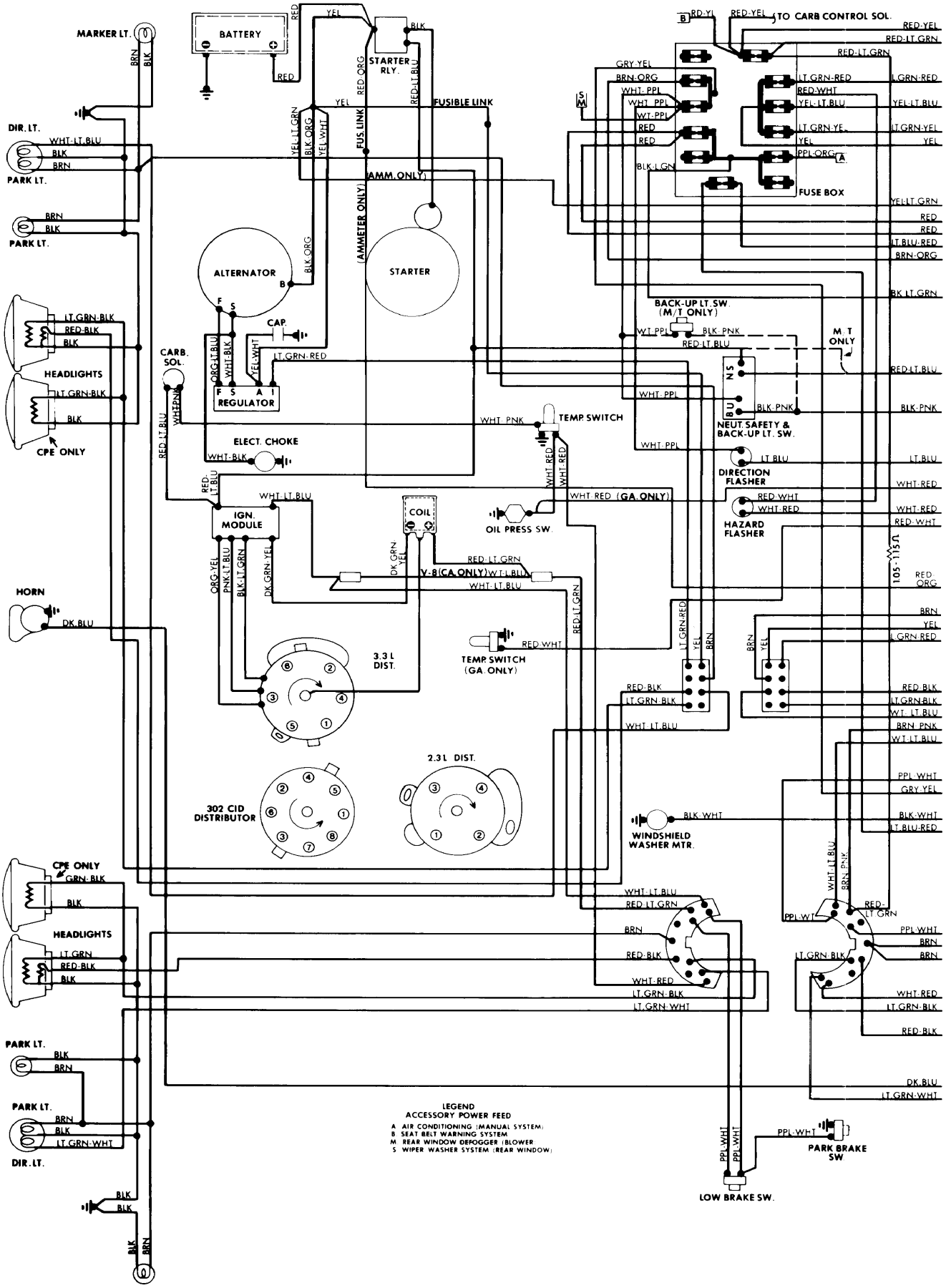
BATTERY
MARKER LT.
DIR. LT.
PARK LT.
STARTER RLY.
FUSIBLE LINK
(AMM. ONLY)
(AMMETER ONLY)
ALTERNATOR
STARTER
CAP.
CARB. SOL.
REGULATOR
HEADLIGHTS
CPE ONLY
ELECT. CHOKE
IGN. MODULE
COIL
OIL PRESS SW.
TEMP. SWITCH
TEMP. SWITCH (GA. ONLY)
V-8 (CA. ONLY)
WHT-RED (GA. ONLY)
HORN
3.3 L DIST.
2.3 L DIST.
302 CID DISTRIBUTOR
WINDSHIELD WASHER MTR.
TO CARB CONTROL SOL.
FUSE BOX
BACK-UP LT. SW. (M/T ONLY)
M. T. ONLY
NEUT. SAFETY & BACK-UP LT. SW.
DIRECTION FLASHER
HAZARD FLASHER
PARK BRAKE SW.
LOW BRAKE SW.
LEGEND
ACCESSORY POWER FEED
A AIR CONDITIONING (MANUAL SYSTEM)
B SEAT BELT WARNING SYSTEM
M REAR WINDOW DEFOGGER (BLOWER
S WIPER WASHER SYSTEM (REAR WINDOW)

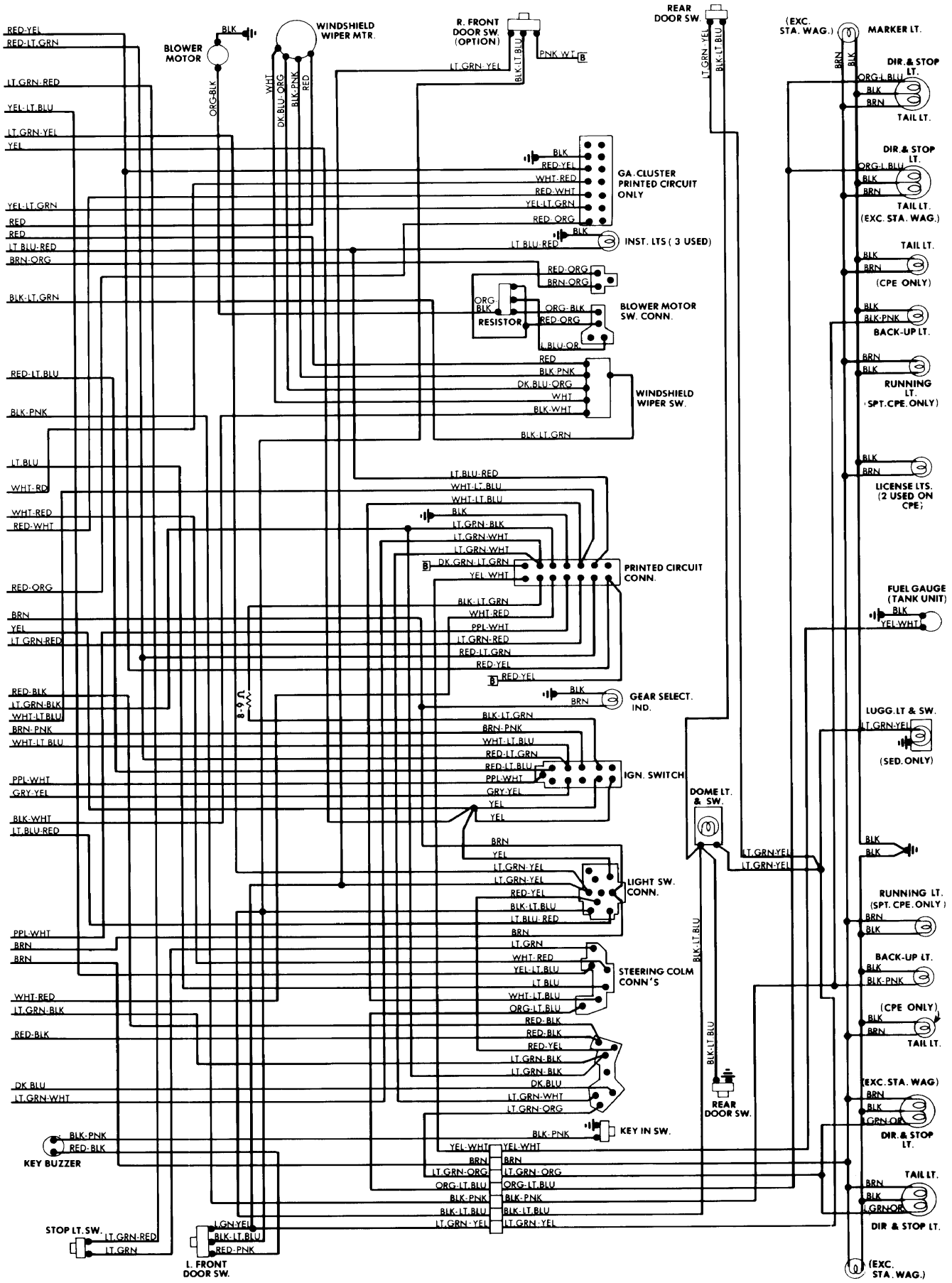
BLOWER MOTOR
WINDSHIELD WIPER MTR.
R. FRONT DOOR SW. (OPTION)
REAR DOOR SW.
(EXC. STA. WAG.)
MARKER LT.
DIR. & STOP LT.
TAIL LT.
GA. CLUSTER PRINTED CIRCUIT ONLY
INST. LTS (3 USED)
TAIL LT. (EXC. STA. WAG.)
TAIL LT. (CPE ONLY)
BLOWER MOTOR SW. CONN.
RESISTOR
BACK-UP LT.
WINDSHIELD WIPER SW.
RUNNING LT. (SPT. CPE. ONLY)
LICENSE LTS. (2 USED ON CPE)
PRINTED CIRCUIT CONN.
FUEL GAUGE (TANK UNIT)
GEAR SELECT. IND.
LUGG. LT & SW.
(SED. ONLY)
IGN. SWITCH
DOME LT. & SW.
LIGHT SW. CONN.
RUNNING LT. (SPT. CPE. ONLY)
STEERING COLM CONN'S
BACK-UP LT.
(CPE ONLY)
TAIL LT.
(EXC. STA. WAG)
REAR DOOR SW.
DIR. & STOP LT.
KEY IN SW.
KEY BUZZER
TAIL LT.
DIR & STOP LT.
(EXC. STA. WAG.)
STOP LT. SW.
L. FRONT DOOR SW.