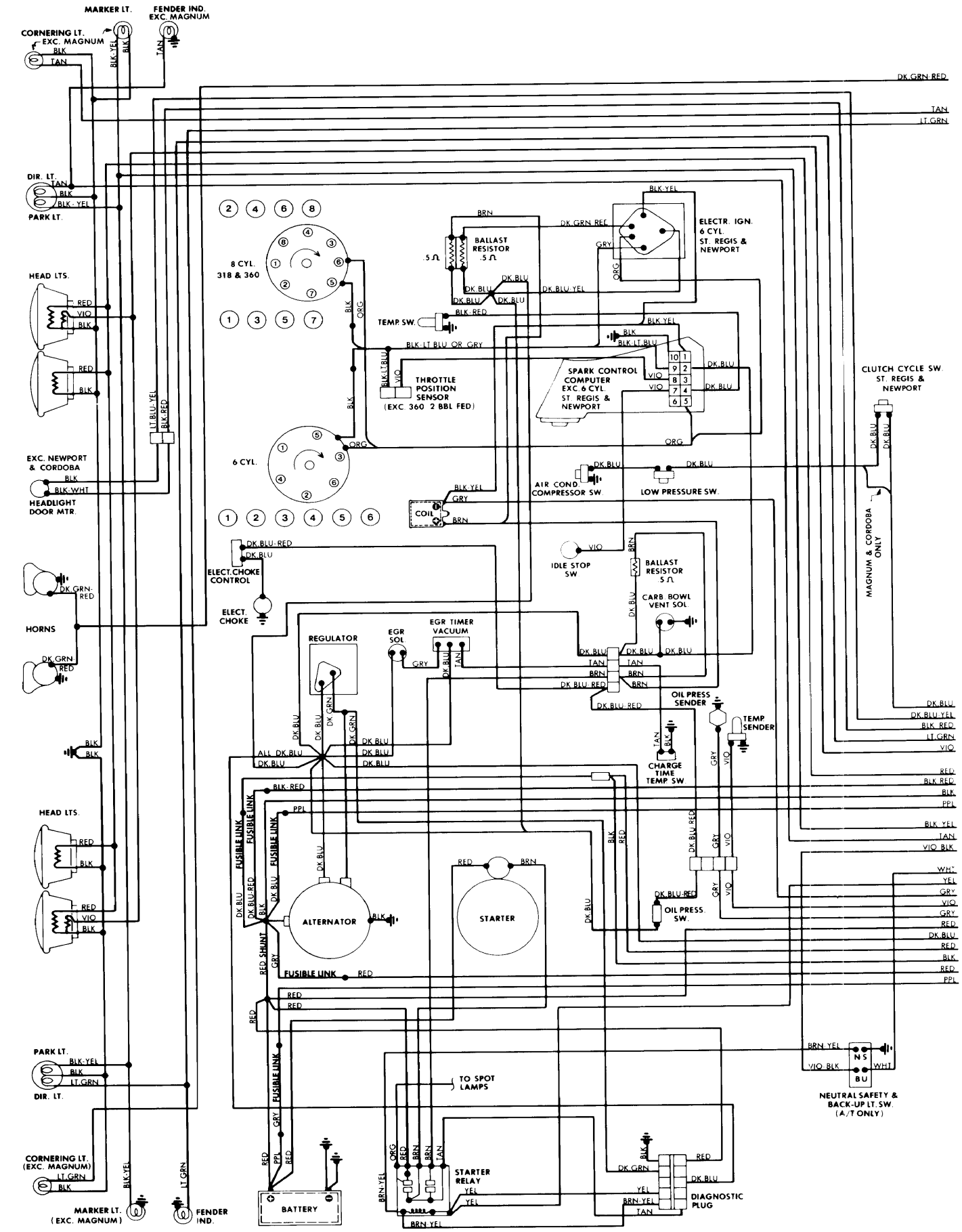
MARKER LT.
FENDER IND. EXC. MAGNUM
CORNERING LT. EXC. MAGNUM
DIR. LT.
PARK LT.
HEAD LTS.
EXC. NEWPORT & CORDOBA
HEADLIGHT DOOR MTR.
HORNS
8 CYL. 318 & 360
6 CYL.
BALLAST RESISTOR .5Ω
TEMP. SW.
THROTTLE POSITION SENSOR (EXC. 360 2 BBL FED)
ELECTR. IGN. 6 CYL. ST. REGIS & NEWPORT
SPARK CONTROL COMPUTER EXC. 6 CYL. ST. REGIS & NEWPORT
CLUTCH CYCLE SW. ST. REGIS & NEWPORT
MAGNUM & CORDOBA ONLY
AIR COND. COMPRESSOR SW.
LOW PRESSURE SW.
COIL
IDLE STOP SW.
BALLAST RESISTOR 5Ω
CARB. BOWL VENT SOL.
ELECT. CHOKE CONTROL
ELECT. CHOKE
REGULATOR
EGR SOL.
EGR TIMER VACUUM
OIL PRESS SENDER
TEMP SENDER
CHARGE TIME TEMP. SW.
OIL PRESS. SW.
FUSIBLE LINK
SHUNT
ALTERNATOR
STARTER
TO SPOT LAMPS
STARTER RELAY
BATTERY
DIAGNOSTIC PLUG
NEUTRAL SAFETY & BACK-UP LT. SW. (A/T ONLY)
CORNERING LT. (EXC. MAGNUM)
MARKER LT. (EXC. MAGNUM)
FENDER IND.

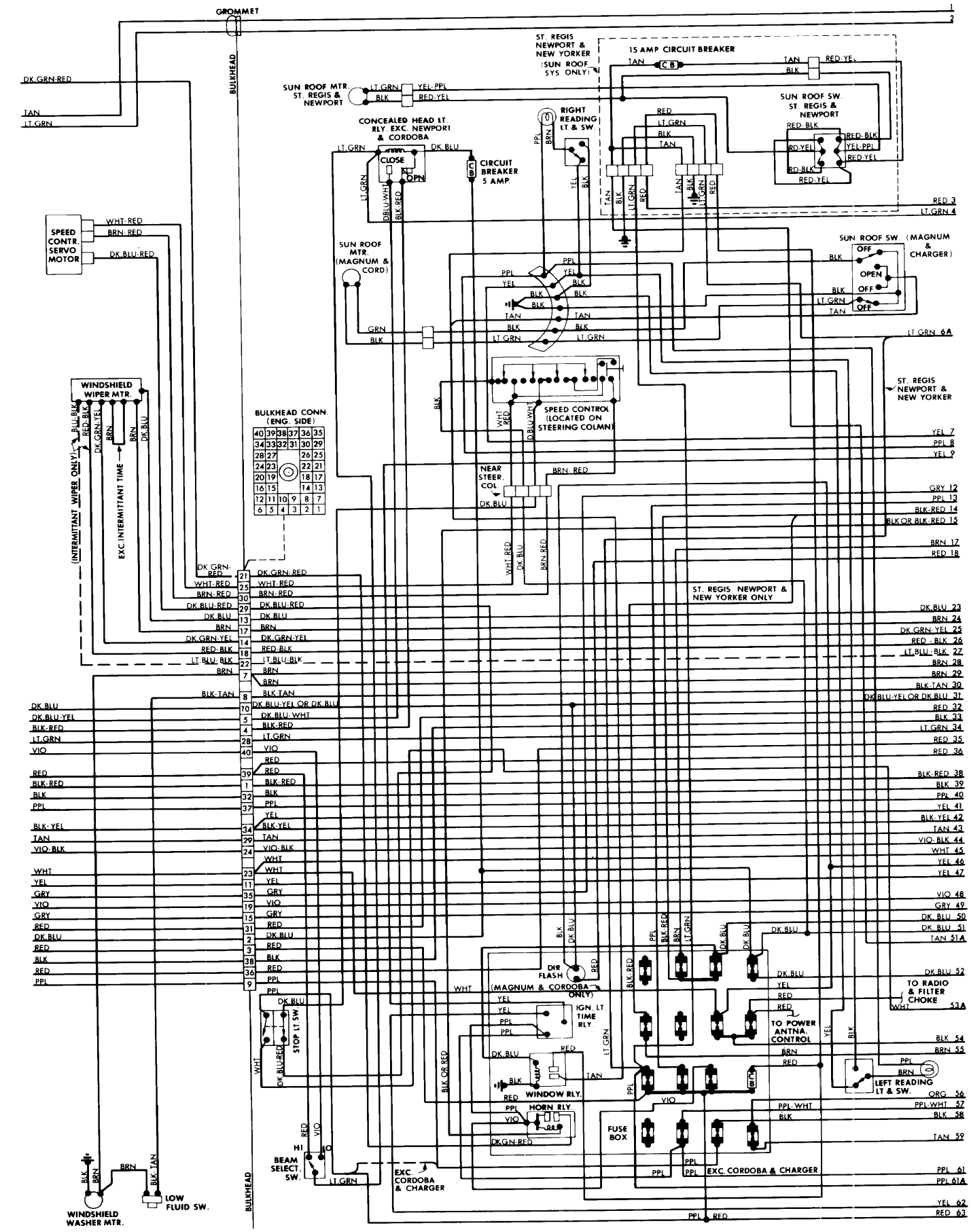
GROMMET
BULKHEAD
ST. REGIS NEWPORT & NEW YORKER (SUN ROOF SYS ONLY)
15 AMP CIRCUIT BREAKER
SUN ROOF MTR. ST. REGIS & NEWPORT
SUN ROOF SW. ST. REGIS & NEWPORT
CONCEALED HEAD LT. RLY. EXC. NEWPORT & CORDOBA
CIRCUIT BREAKER 5 AMP.
RIGHT READING LT & SW.
SPEED CONTR. SERVO MOTOR
SUN ROOF MTR. (MAGNUM & CORD)
SUN ROOF SW. (MAGNUM & CHARGER)
ST. REGIS NEWPORT & NEW YORKER
WINDSHIELD WIPER MTR.
(INTERMITTANT WIPER ONLY)
EXC. INTERMITTANT TIME
BULKHEAD CONN. (ENG. SIDE)
SPEED CONTROL (LOCATED ON STEERING COLUMN)
NEAR STEER. COL.
ST. REGIS NEWPORT & NEW YORKER ONLY
DIR FLASH (MAGNUM & CORDOBA ONLY)
IGN. LT. TIME RLY.
TO RADIO & FILTER CHOKE
TO POWER ANTNA. CONTROL
STOP LT SW.
WINDOW RLY.
HORN RLY.
LEFT READING LT & SW.
FUSE BOX
BEAM SELECT. SW.
EXC. CORDOBA & CHARGER
EXC. CORDOBA & CHARGER
WINDSHIELD WASHER MTR.
LOW FLUID SW.

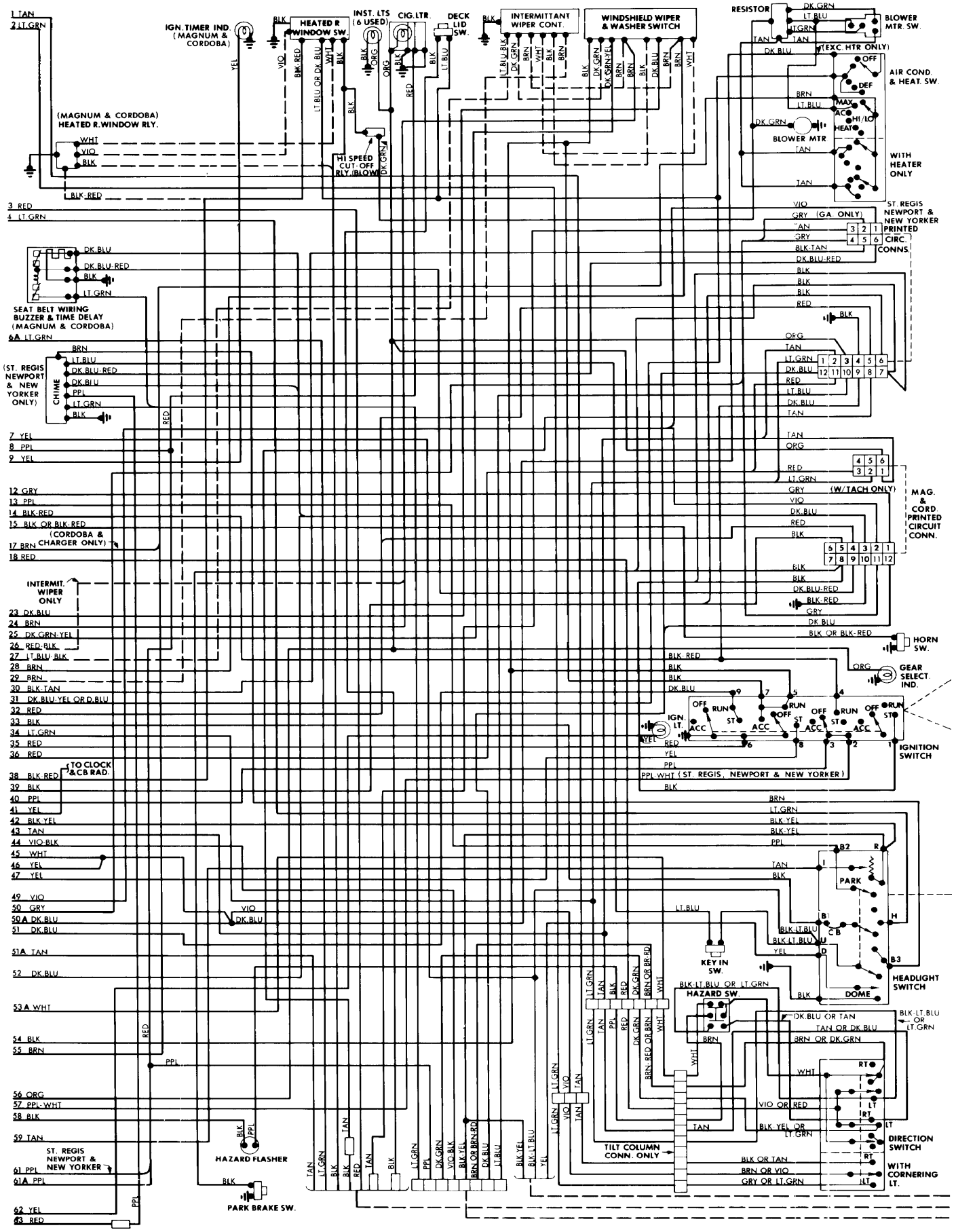
IGN. TIMER IND. (MAGNUM & CORDOBA)
HEATED R WINDOW SW.
INST. LTS (6 USED)
CIG. LTR.
DECK LID SW.
INTERMITTANT WIPER CONT.
WINDSHIELD WIPER & WASHER SWITCH
RESISTOR
BLOWER MTR. SW.
(EXC. HTR ONLY)
AIR COND. & HEAT. SW.
OFF
DEF
MAX
AC
HI/LO
HEAT
BLOWER MTR
WITH HEATER ONLY
(MAGNUM & CORDOBA) HEATED R.WINDOW RLY.
HI SPEED CUT-OFF RLY. (BLOWER)
ST. REGIS NEWPORT & NEW YORKER PRINTED CIRC. CONNS.
(GA. ONLY)
SEAT BELT WIRING BUZZER & TIME DELAY (MAGNUM & CORDOBA)
(ST. REGIS NEWPORT & NEW YORKER ONLY)
CHIME
(W/TACH ONLY)
MAG. & CORD. PRINTED CIRCUIT CONN.
(CORDOBA & CHARGER ONLY)
INTERMIT. WIPER ONLY
HORN SW.
GEAR SELECT. IND.
IGN. LT.
IGNITION SWITCH
(ST. REGIS, NEWPORT & NEW YORKER)
TO CLOCK & CB RAD.
PARK
CB
HEADLIGHT SWITCH
DOME
KEY IN SW.
HAZARD SW.
DIRECTION SWITCH WITH CORNERING LT.
TILT COLUMN CONN. ONLY
HAZARD FLASHER
PARK BRAKE SW.
ST. REGIS NEWPORT & NEW YORKER

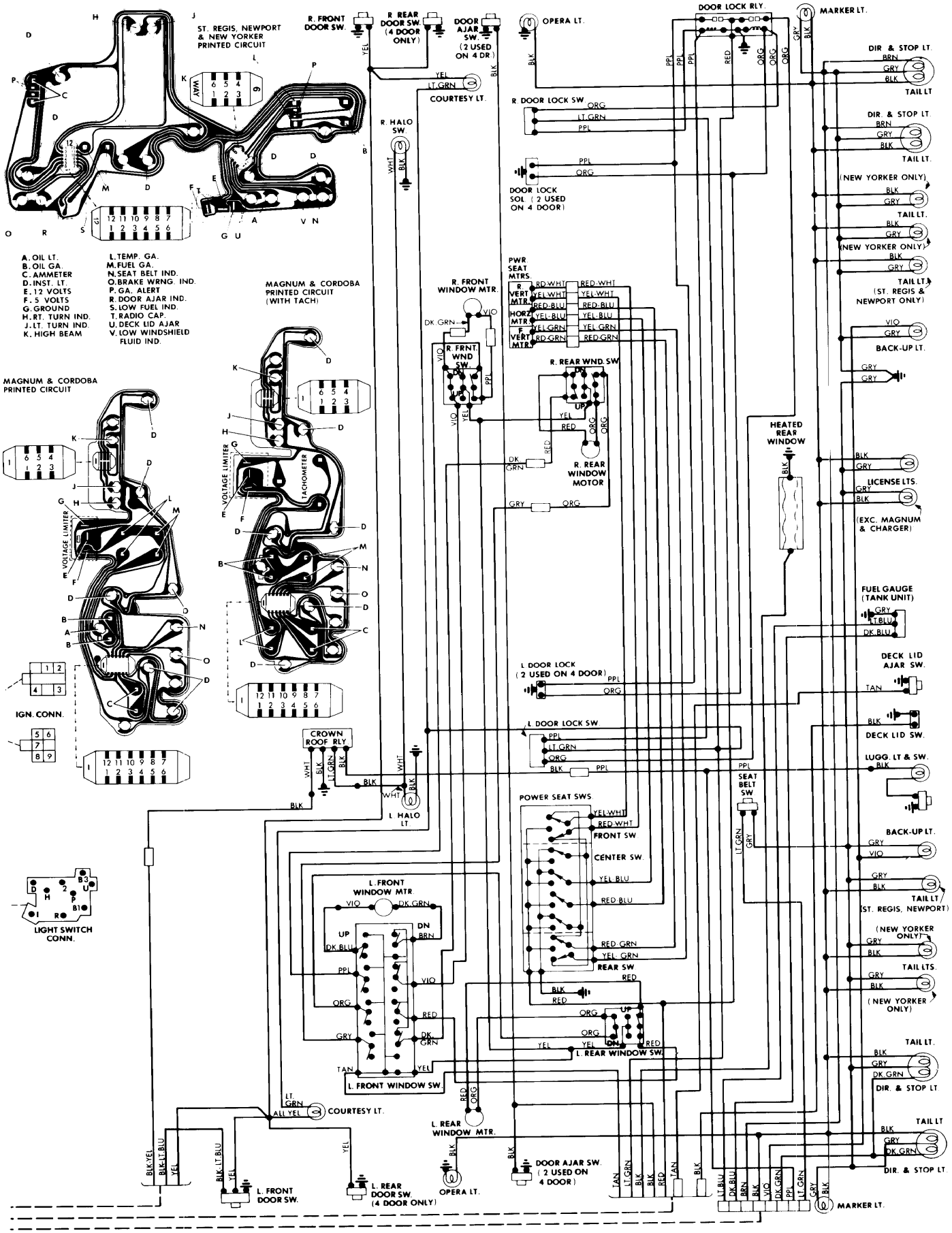
ST. REGIS, NEWPORT & NEW YORKER PRINTED CIRCUIT
A. OIL LT.
B. OIL GA.
C. AMMETER
D. INST. LT.
E. 12 VOLTS
F. 5 VOLTS
G. GROUND
H. RT. TURN IND.
J. LT. TURN IND.
K. HIGH BEAM
L. TEMP. GA.
M. FUEL GA.
N. SEAT BELT IND.
O. BRAKE WRNG. IND.
P. GA. ALERT
R. DOOR AJAR IND.
S. LOW FUEL IND.
T. RADIO CAP.
U. DECK LID AJAR
V. LOW WINDSHIELD FLUID IND.
MAGNUM & CORDOBA PRINTED CIRCUIT
MAGNUM & CORDOBA PRINTED CIRCUIT (WITH TACH)
VOLTAGE LIMITER
TACHOMETER
IGN. CONN.
LIGHT SWITCH CONN.
R. FRONT DOOR SW.
R REAR DOOR SW. (4 DOOR ONLY)
DOOR AJAR SW. (2 USED ON 4 DR.)
OPERA LT.
COURTESY LT.
R. HALO SW.
DOOR LOCK RLY.
MARKER LT.
R. DOOR LOCK SW.
DOOR LOCK SOL. (2 USED ON 4 DOOR)
PWR SEAT MTRS.
R. VERT. MTR.
HORZ. MTR.
F. VERT. MTR.
R. FRONT WINDOW MTR.
R. FRNT. WND SW.
R. REAR WND. SW.
R. REAR WINDOW MOTOR
HEATED REAR WINDOW
DIR. & STOP LT.
TAIL LT.
(NEW YORKER ONLY)
(ST. REGIS & NEWPORT ONLY)
BACK-UP LT.
LICENSE LTS.
(EXC. MAGNUM & CHARGER)
FUEL GAUGE (TANK UNIT)
DECK LID AJAR SW.
DECK LID SW.
LUGG. LT & SW.
SEAT BELT SW.
L DOOR LOCK (2 USED ON 4 DOOR)
L DOOR LOCK SW.
CROWN ROOF RLY.
L HALO LT
POWER SEAT SWS.
FRONT SW.
CENTER SW.
REAR SW.
L. FRONT WINDOW MTR.
L. FRONT WINDOW SW.
L. REAR WINDOW SW.
L. REAR WINDOW MTR.
DOOR AJAR SW. (2 USED ON 4 DOOR)
L. FRONT DOOR SW.
L. REAR DOOR SW. (4 DOOR ONLY)
OPERA LT.
MARKER LT.