1979 American Motors

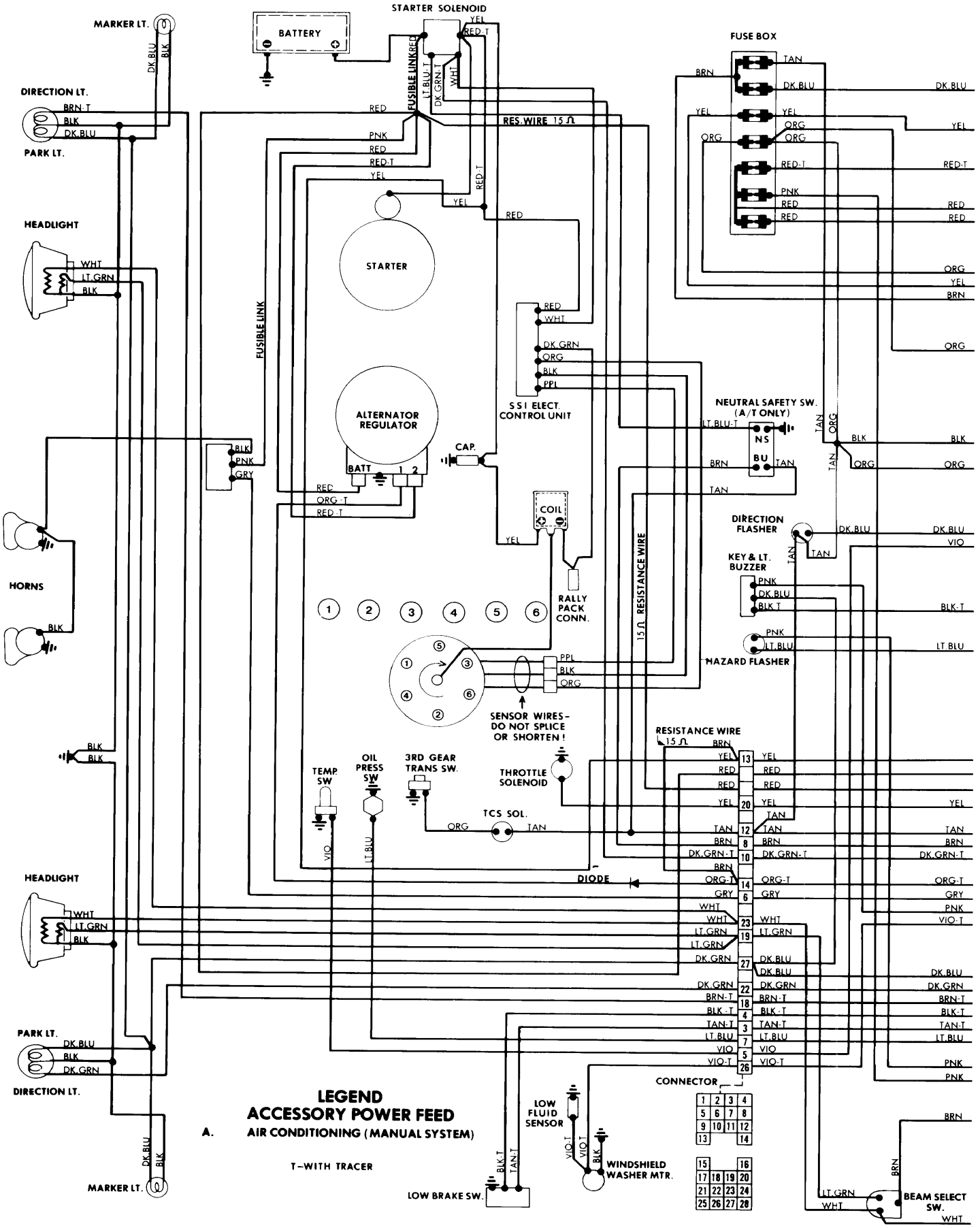

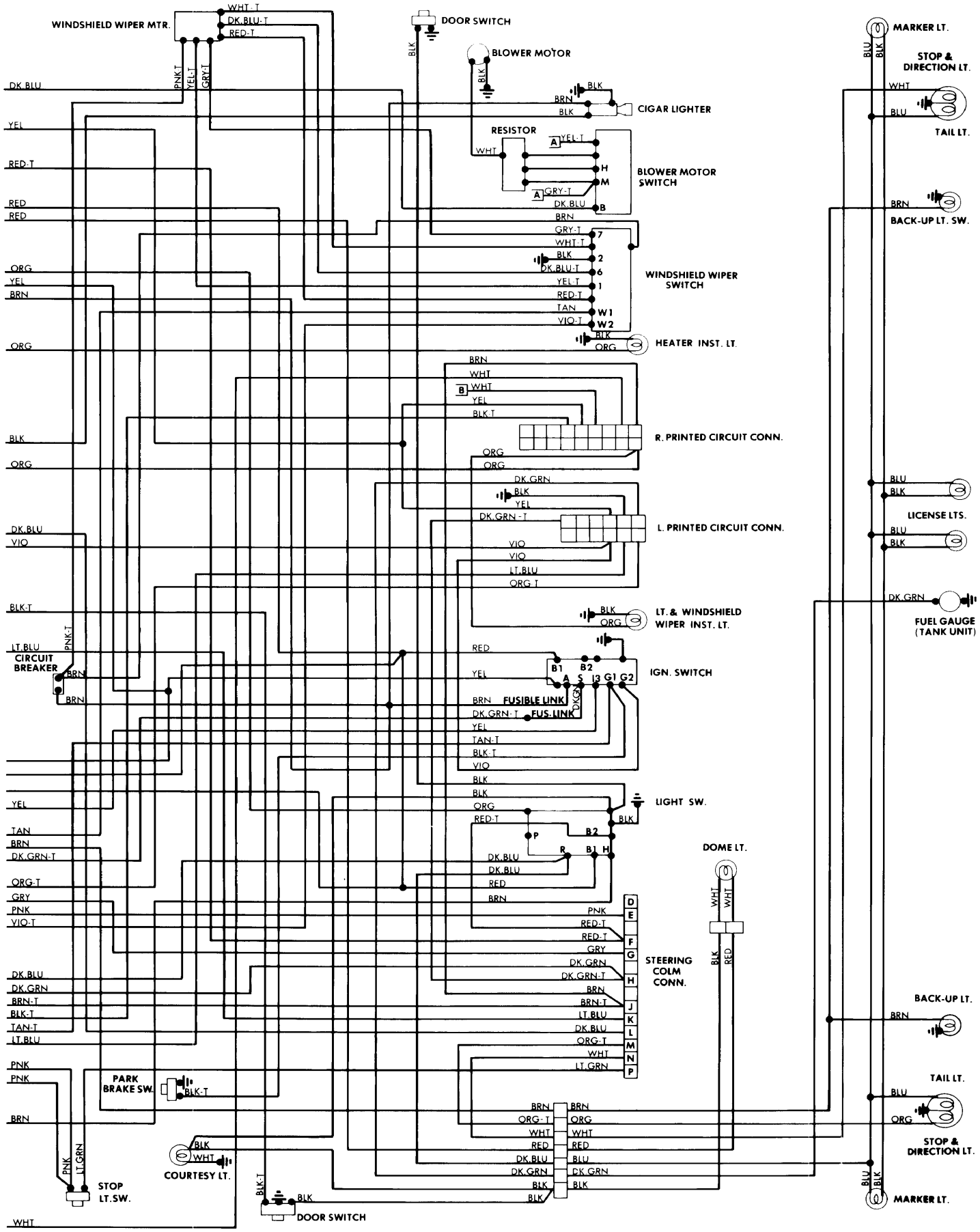
WINDSHIELD WIPER MTR.
WHT-T
DK.BLU-T
RED-T
PNK-T
YEL-T
GRY-T
DOOR SWITCH
BLK
BLOWER MOTOR
CIGAR LIGHTER
BRN
RESISTOR
WHT
YEL-T
GRY-T
DK.BLU
BLOWER MOTOR SWITCH
GRY-T
WHT-T
DK.BLU-T
YEL-T
RED-T
TAN
VIO-T
WINDSHIELD WIPER SWITCH
HEATER INST. LT.
ORG
R. PRINTED CIRCUIT CONN.
DK.GRN
DK.GRN-T
L. PRINTED CIRCUIT CONN.
VIO
LT.BLU
ORG-T
LT. & WINDSHIELD WIPER INST. LT.
CIRCUIT BREAKER
LT.BLU
IGN. SWITCH
FUSIBLE LINK
FUS. LINK
TAN-T
BLK-T
LIGHT SW.
DOME LT.
STEERING COLM CONN.
PARK BRAKE SW.
COURTESY LT.
STOP LT.SW.
DOOR SWITCH
MARKER LT.
STOP & DIRECTION LT.
TAIL LT.
BACK-UP LT. SW.
LICENSE LTS.
FUEL GAUGE (TANK UNIT)
BACK-UP LT.
TAIL LT.
STOP & DIRECTION LT.
MARKER LT.