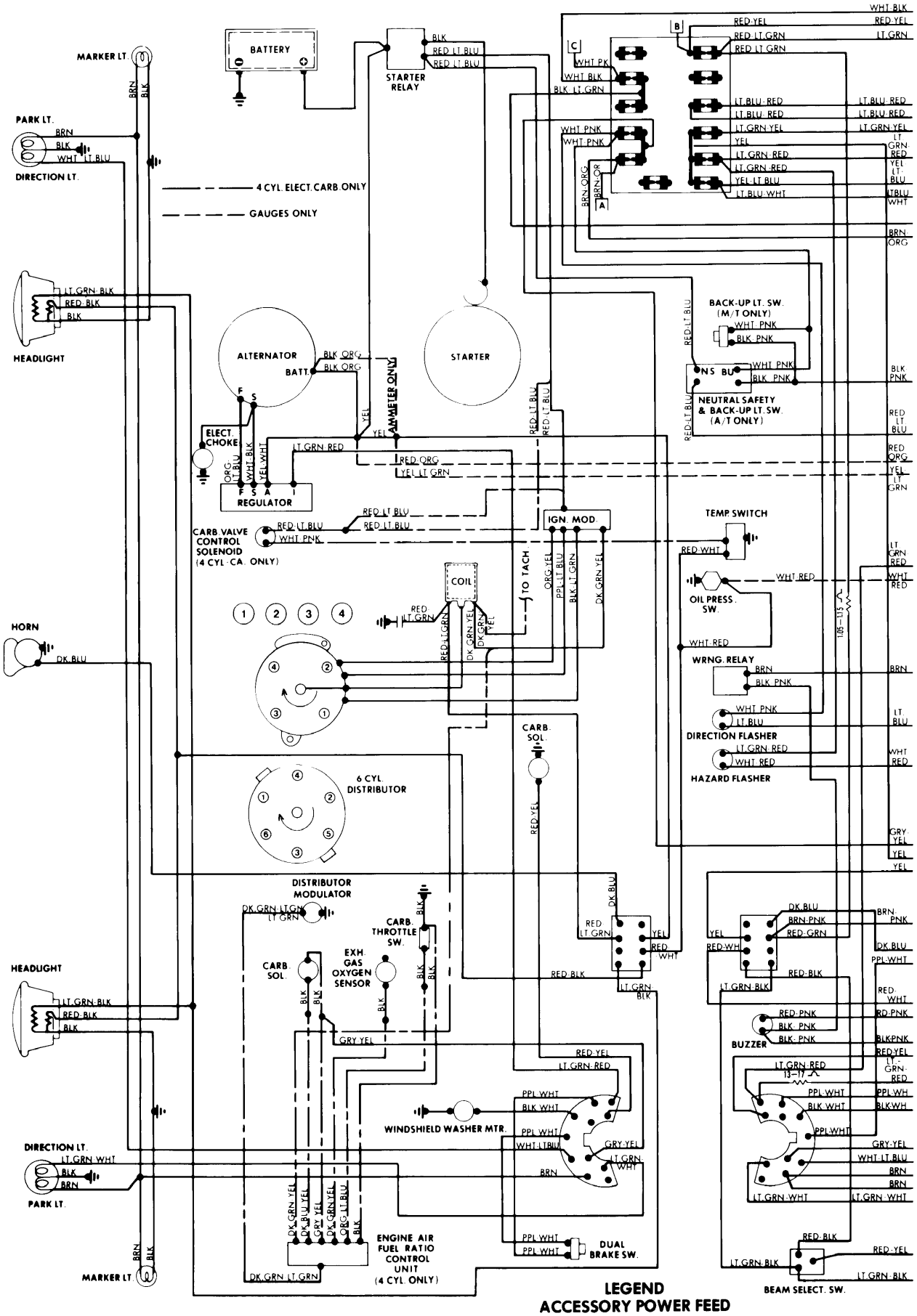

LEGEND

ACCESSORY POWER FEED

A. AIR CONDITIONING (MANUAL SYSTEM)
B. SEAT BELT WARNING SYSTEM
C. REAR WINDOW DEFROSTER (GRID)

Copyright (c) 2001 Mitchell Repair Information Company

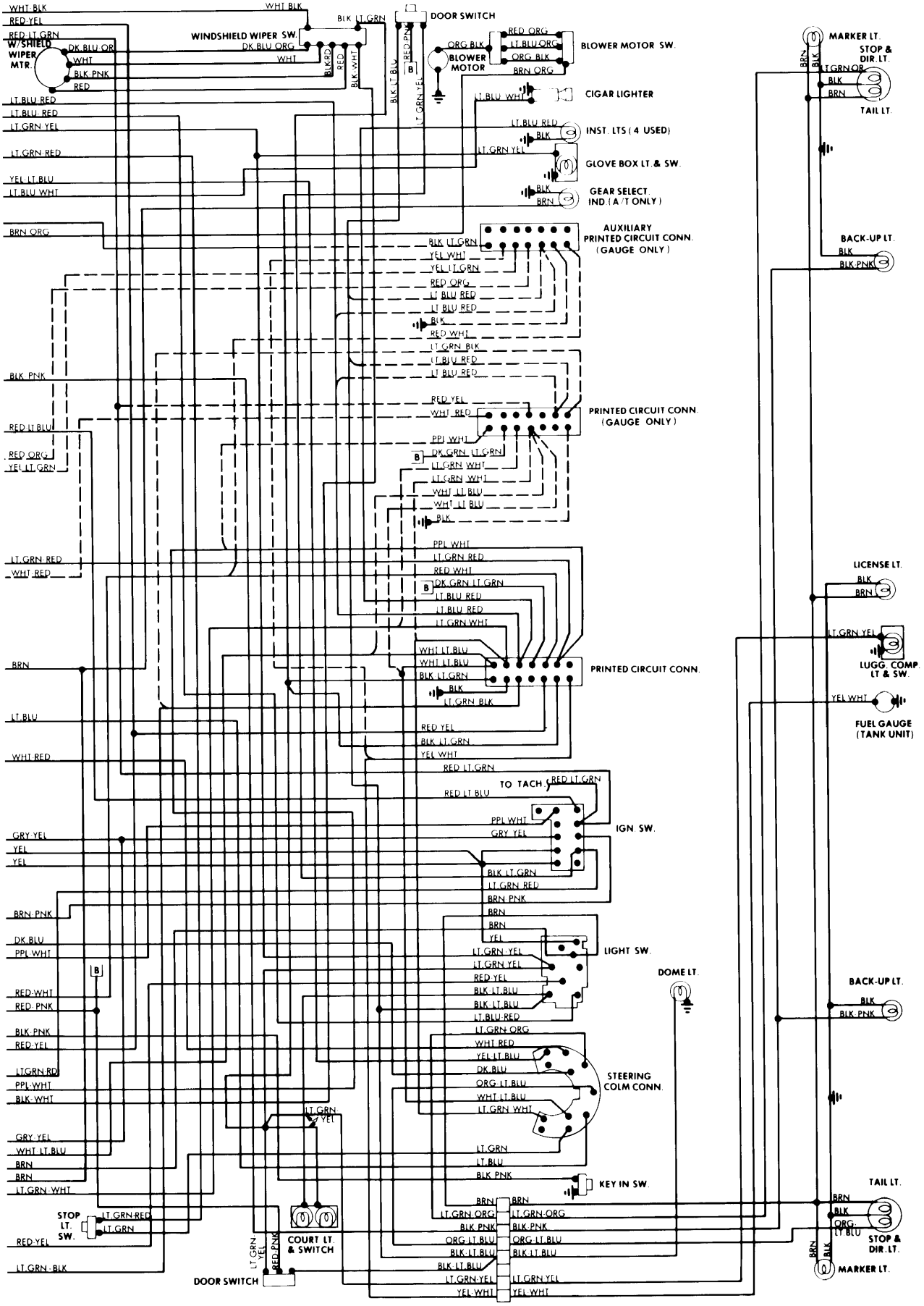

For ACCESSORY Details, see End of Section.

Copyright (c) 2001 Mitchell Repair Information Company