1976 Jeep

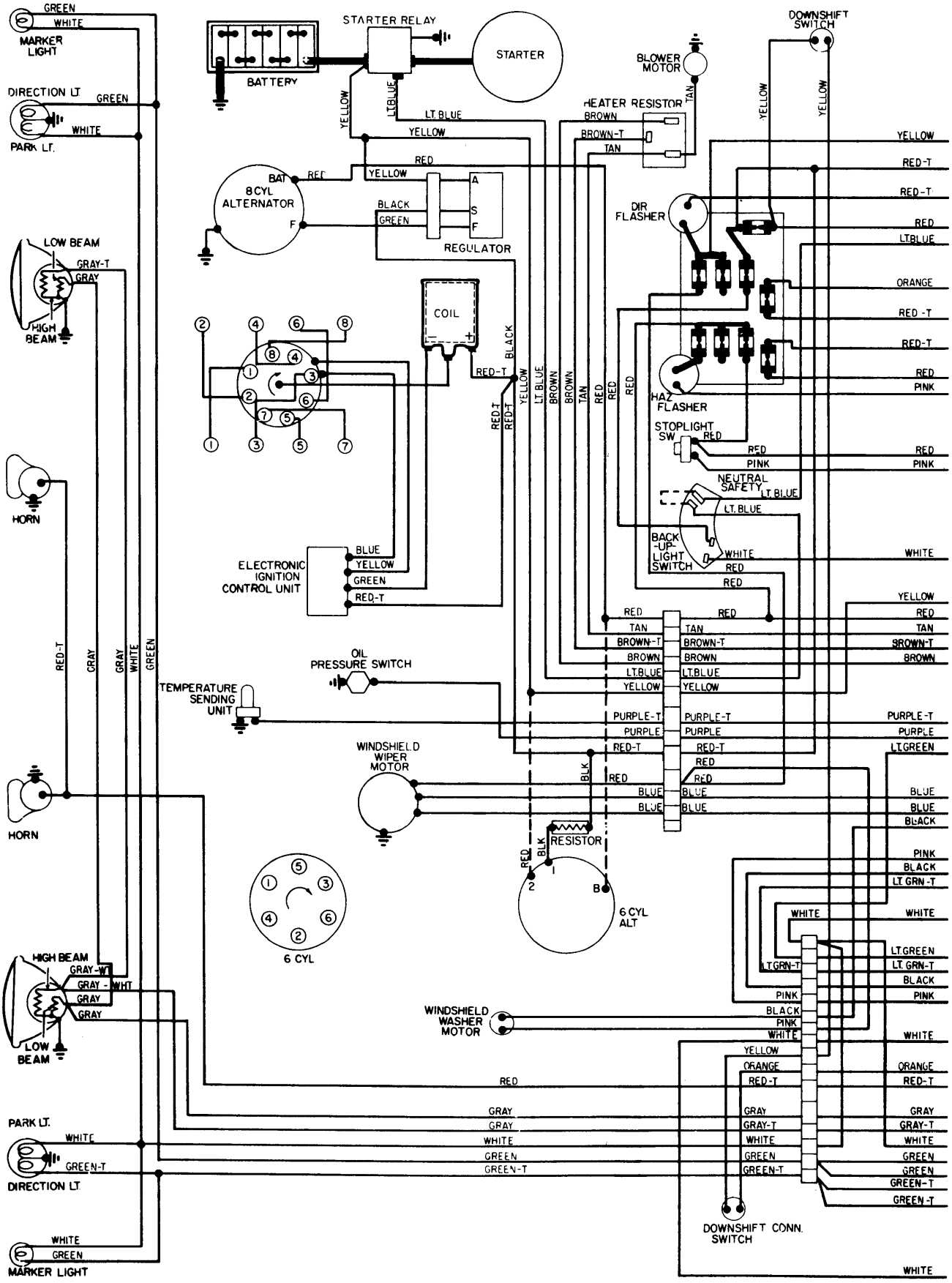

Copyright (c) 2001 Mitchell Repair Information Company

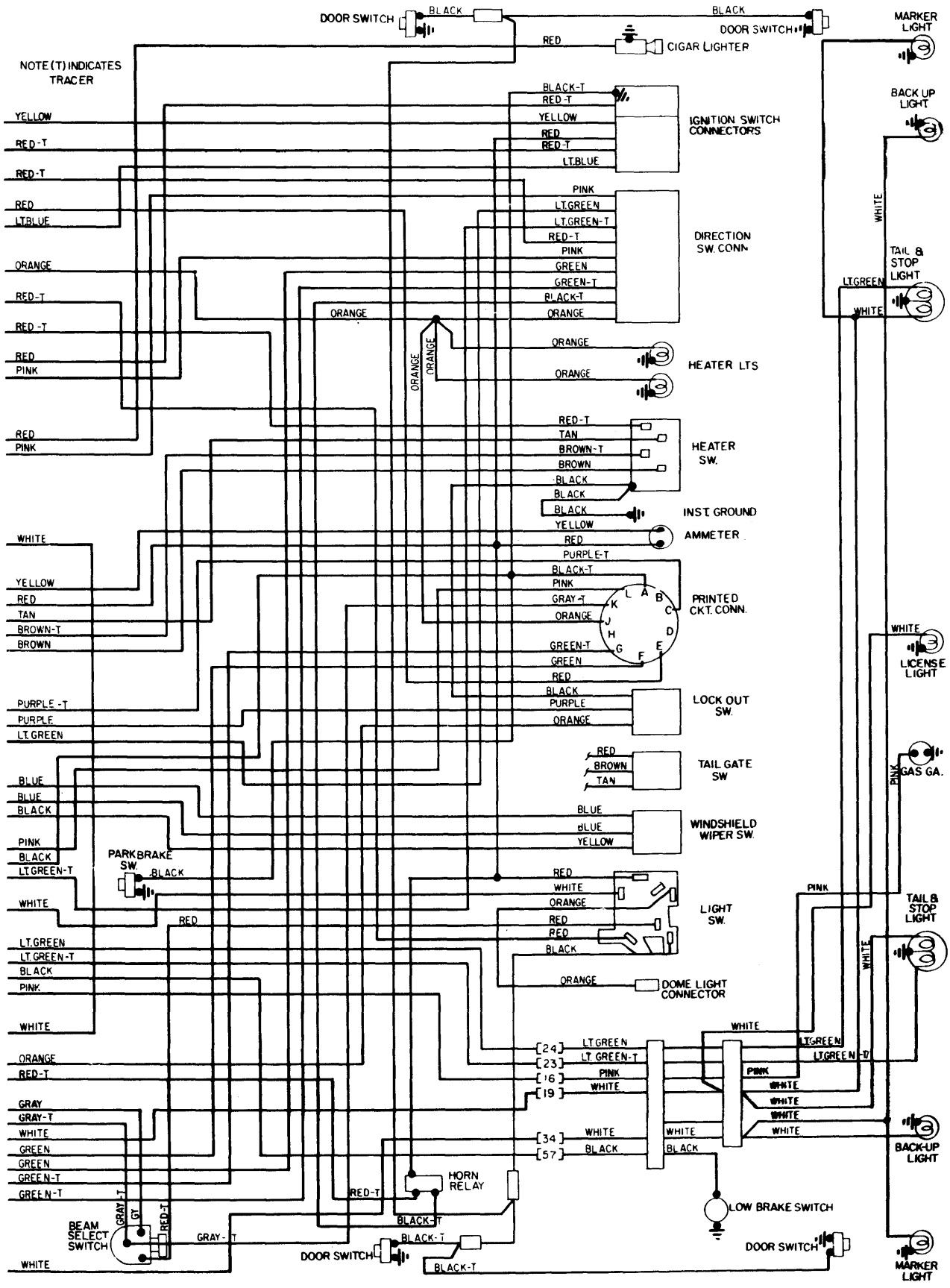

Copyright (c) 2001 Mitchell Repair Information Company