1976 Lincoln

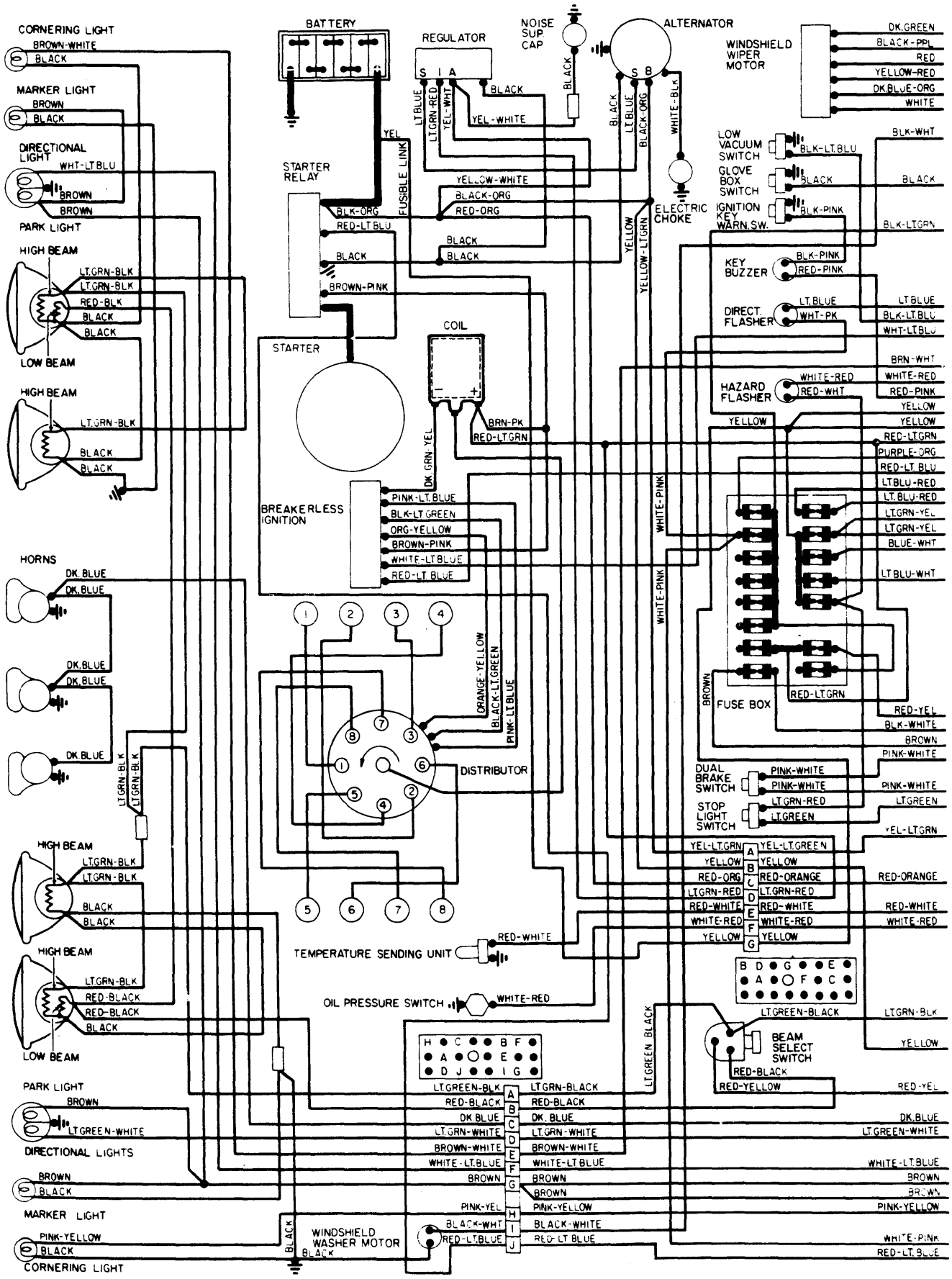

Copyright (c) 2001 Mitchell Repair Information Company

1976 Lincoln Continental

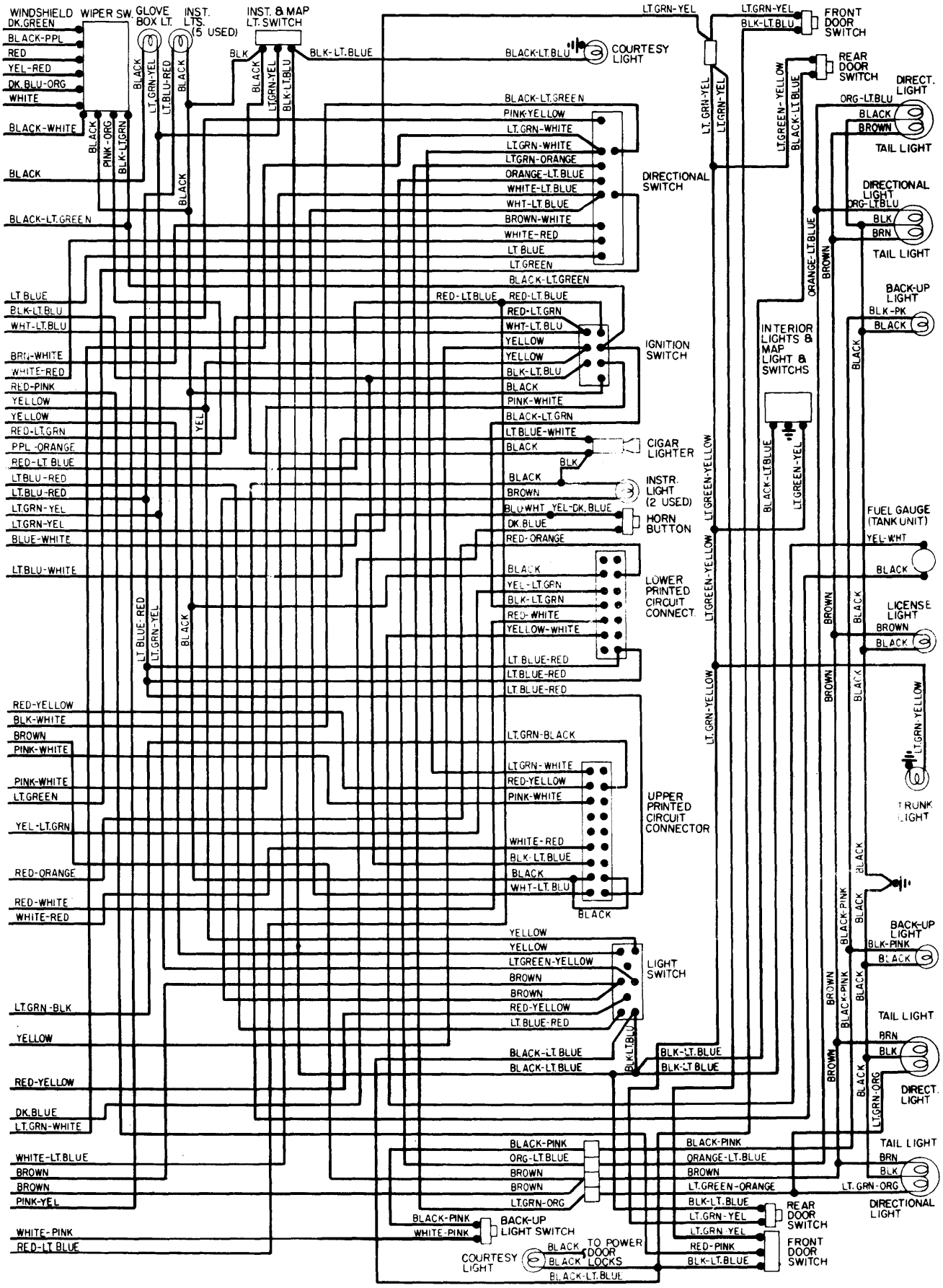

Copyright (c) 2001 Mitchell Repair Information Company