Coronet & Charger SE

1976 Dodge

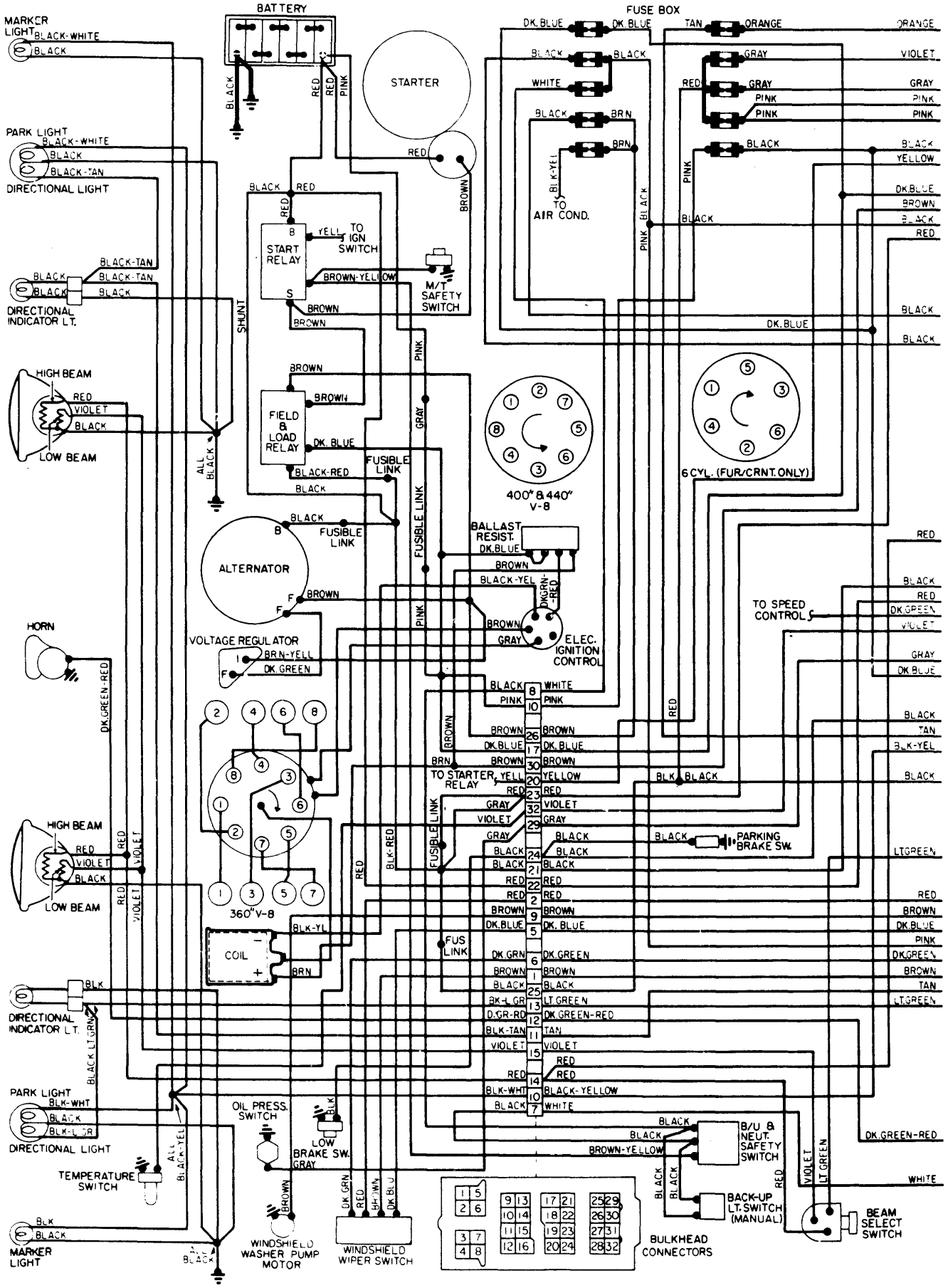

Copyright (c) 2001 Mitchell Repair Information Company

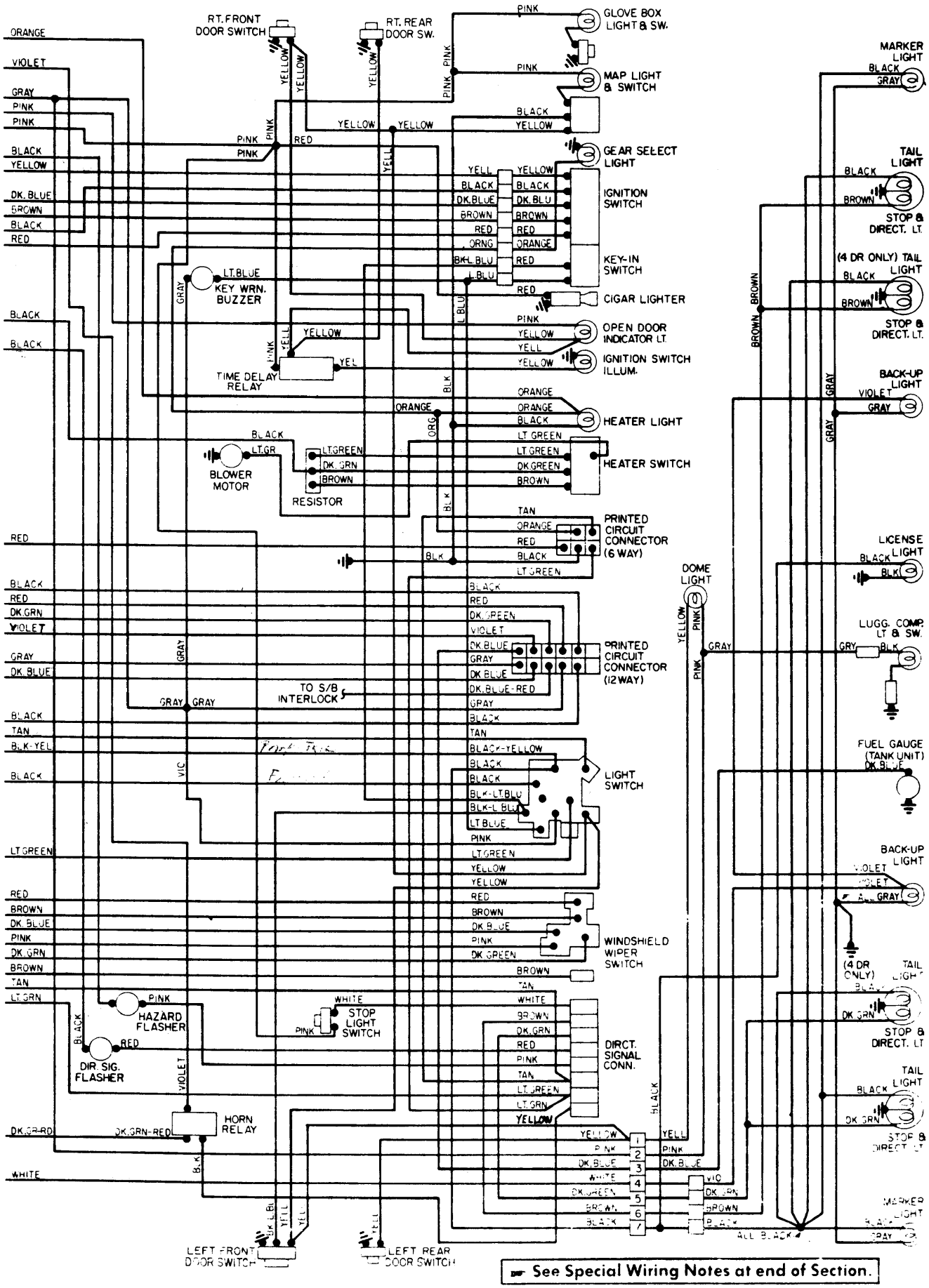

See Special Wiring Notes at end of Section.

Copyright (c) 2001 Mitchell Repair Information Company