1976 Chevrolet

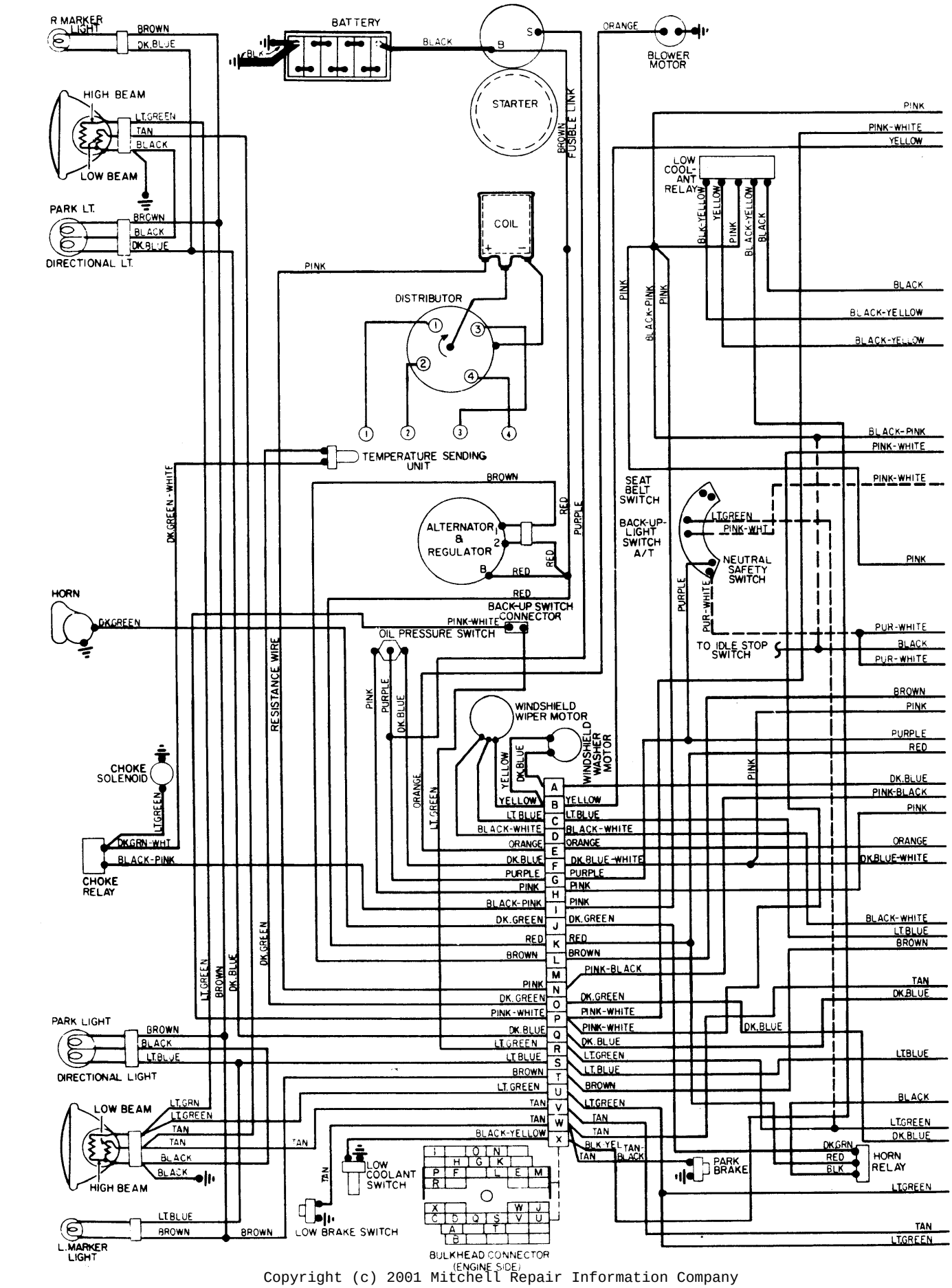

Copyright (c) 2001 Mitchell Repair Information Company

1976 Chevrolet

Vega

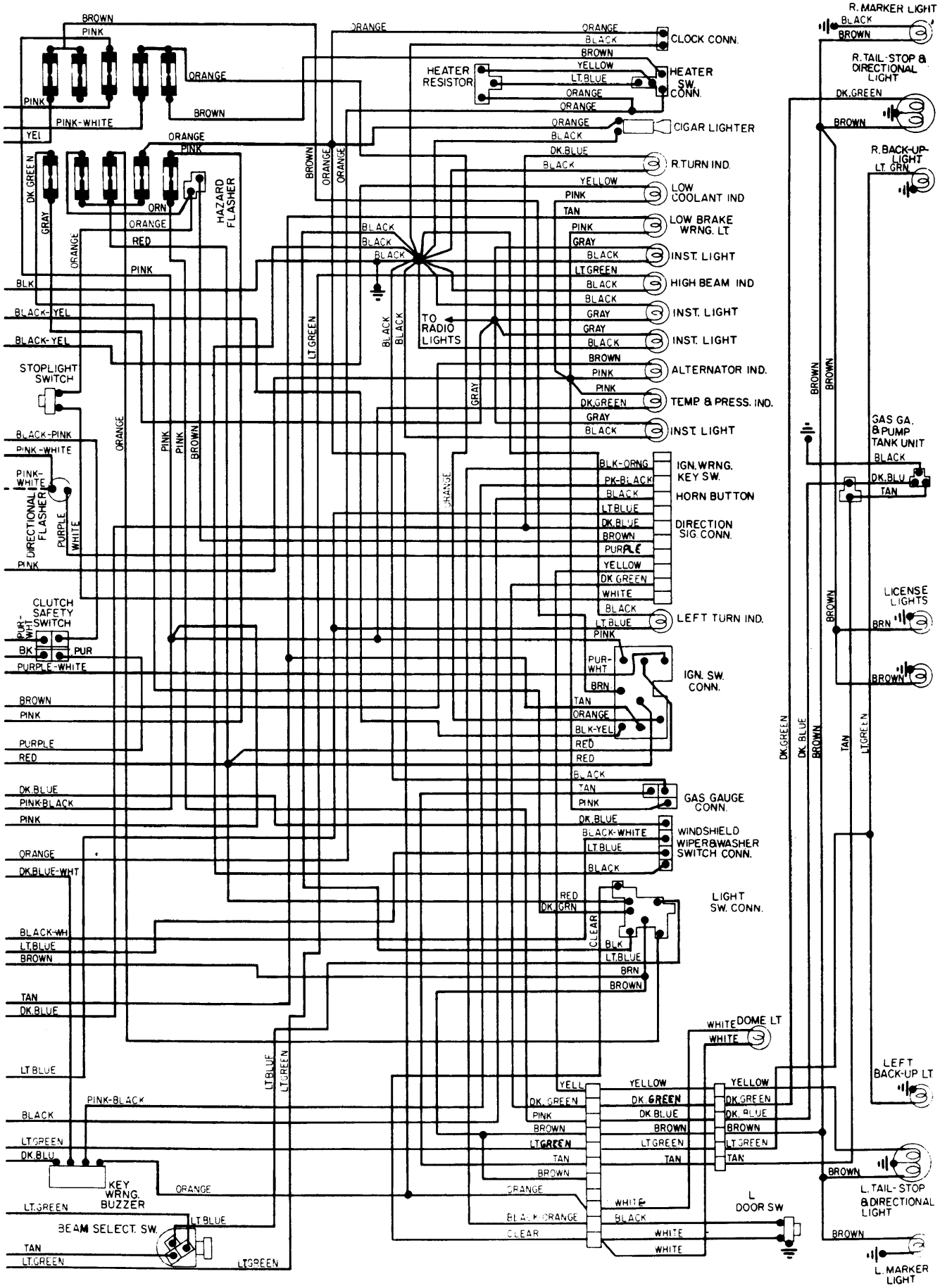

Copyright (c) 2001 Mitchell Repair Information Company