1976 Cadillac

Seville

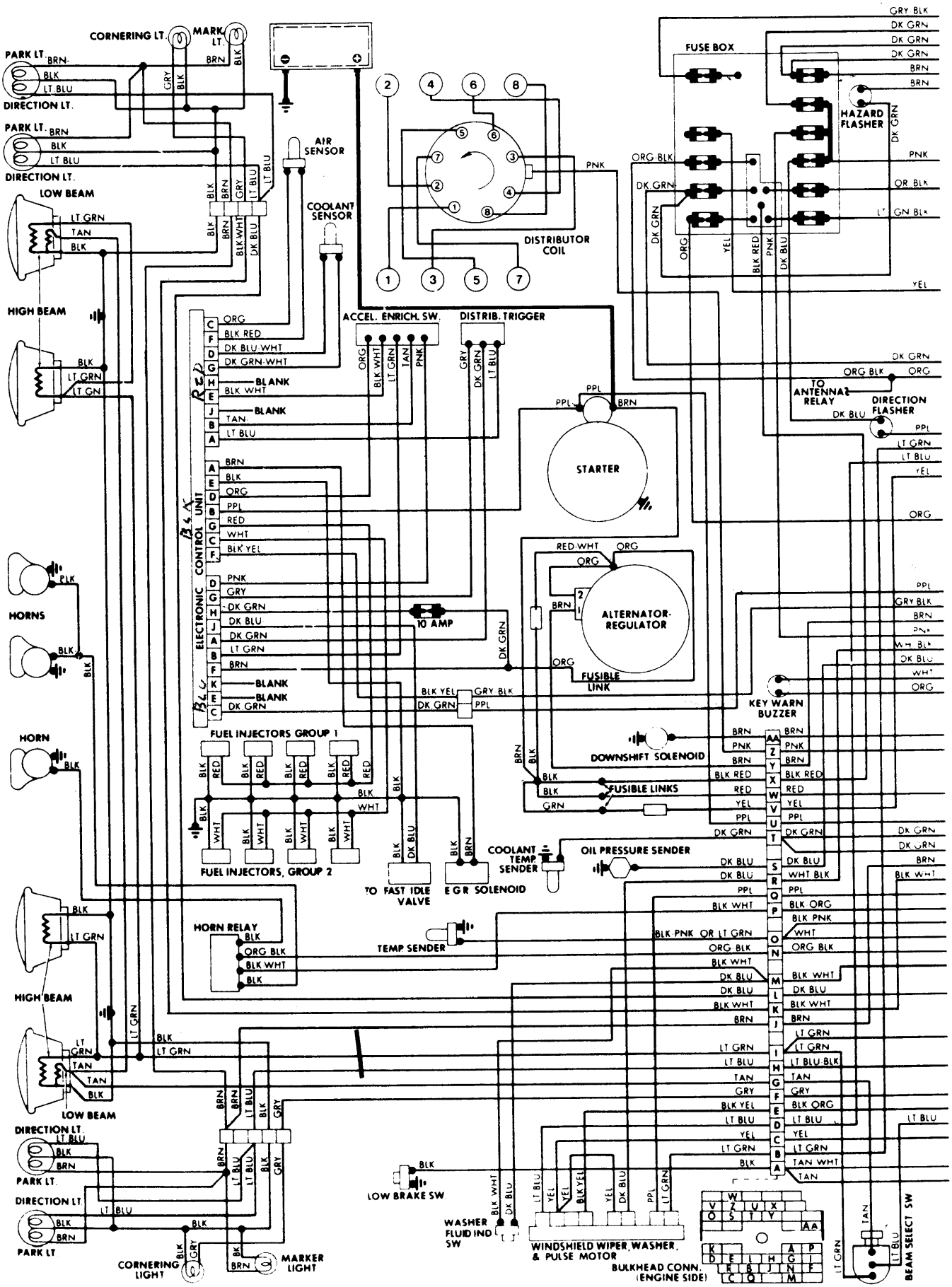

Copyright (c) 2001 Mitchell Repair Information Company

1976 Cadillac

Seville

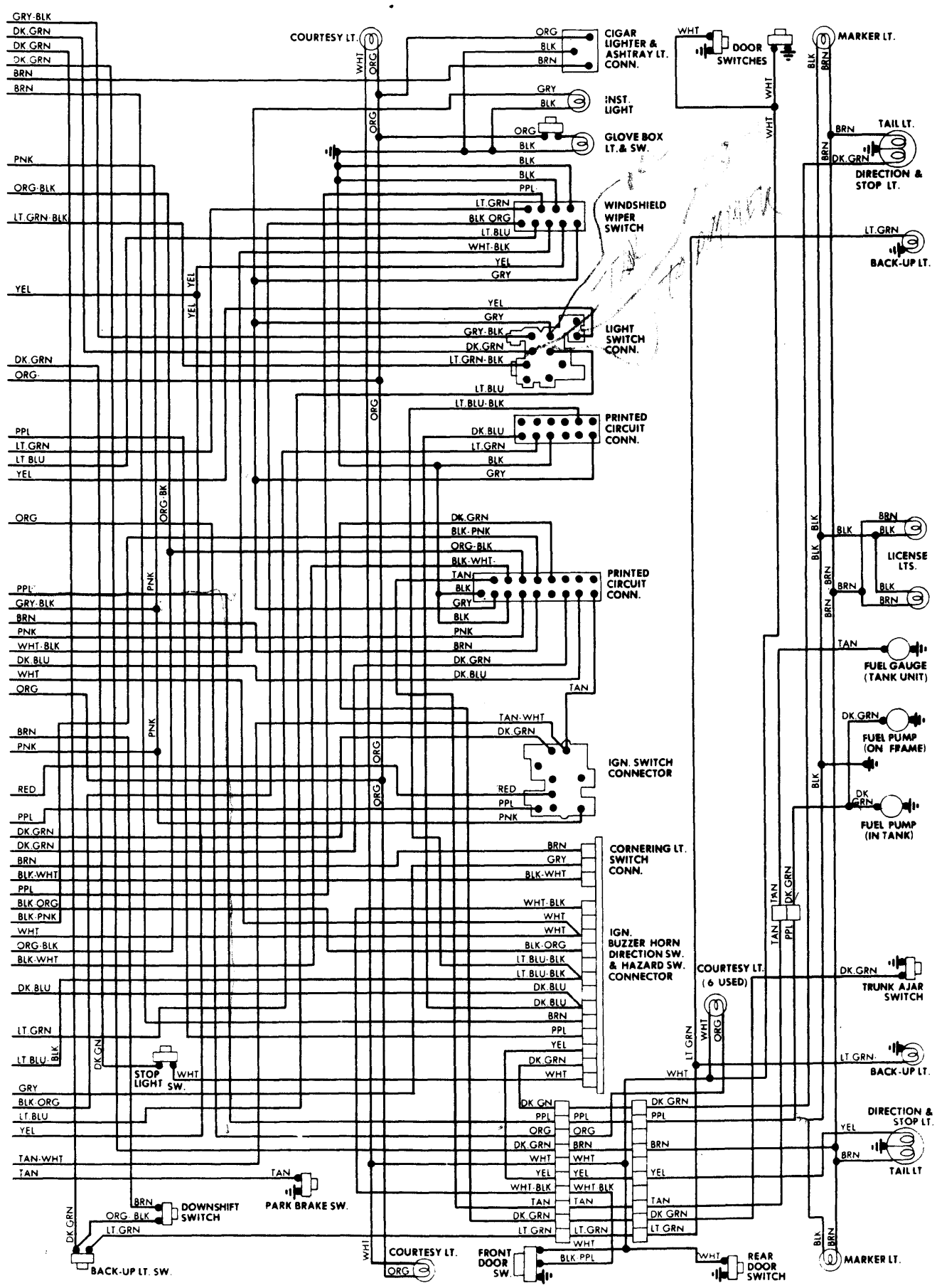

Copyright (c) 2001 Mitchell Repair Information Company