1974 Power Seat Controls

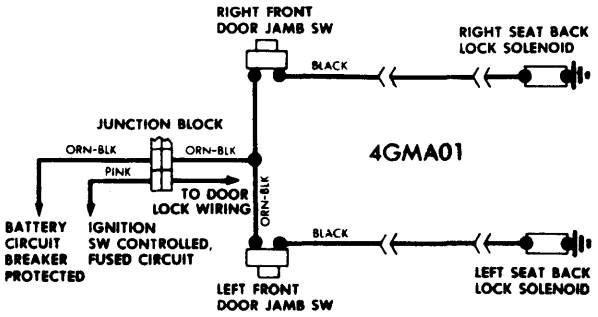

GENERAL MOTORS
SEAT BACK LATCH WIRING

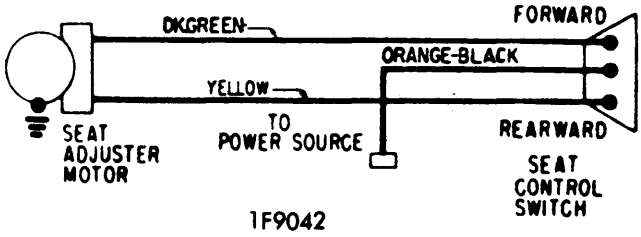

GENERAL MOTORS
TWO-WAY POWER SEAT WIRING

1974 Electric Door Locks

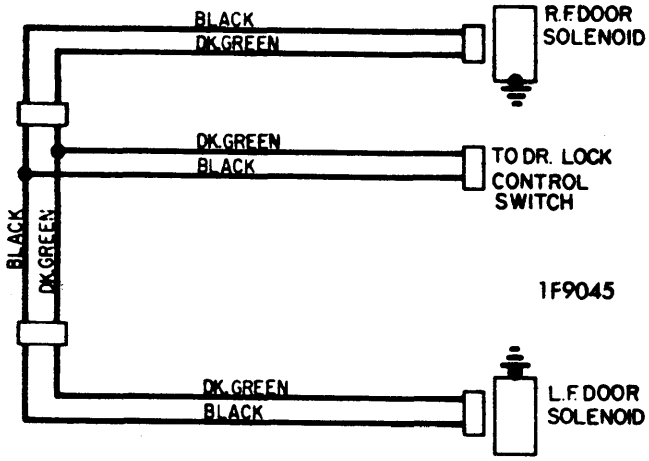

GENERAL MOTORS "F" STYLE DOOR LOCK WIRING

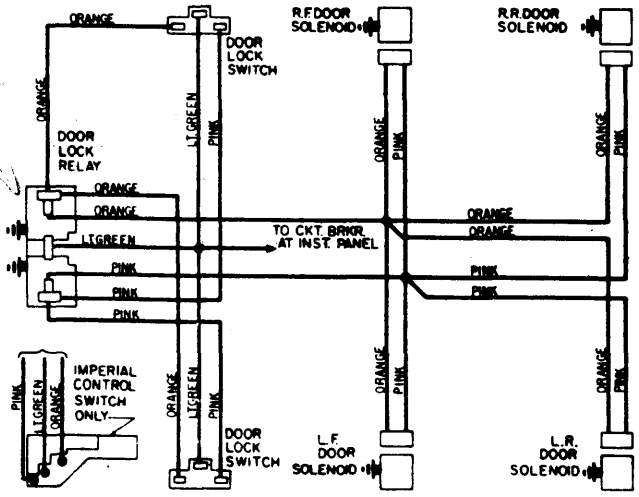

CHRYSLER CORP. DOOR LOCK WIRING

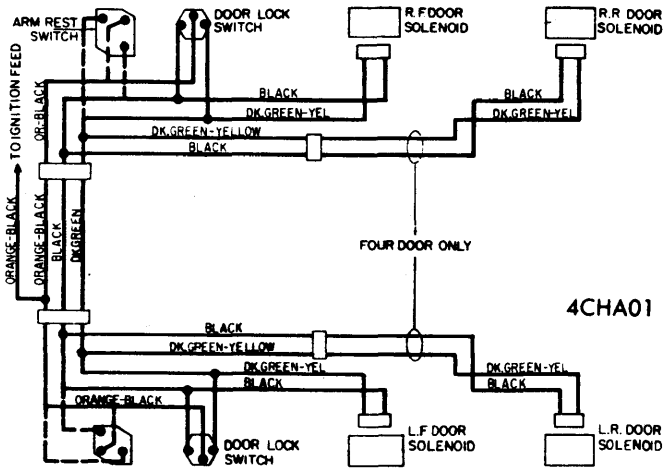

GENERAL MOTORS "A", "B", "C", "E" BODY STYLES
DOOR LOCK WIRING

Copyright (c) 2001 Mitchell Repair Information Company