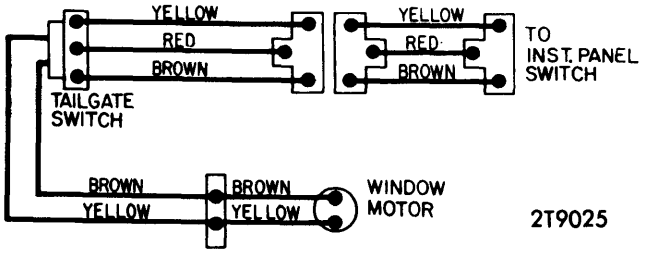

CHRYSLER CORP. TAILGATE WINDOW WIRING

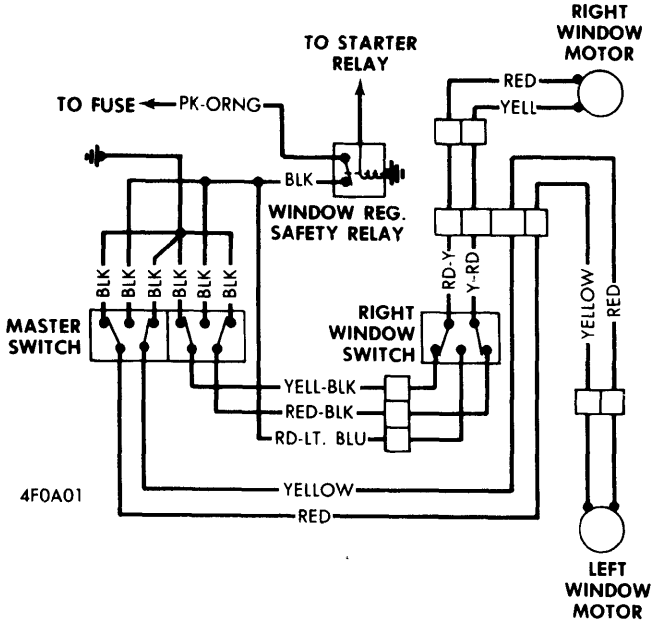

COUGAR, MONTEGO & TORINO 2 DR. POWER WINDOW WIRING

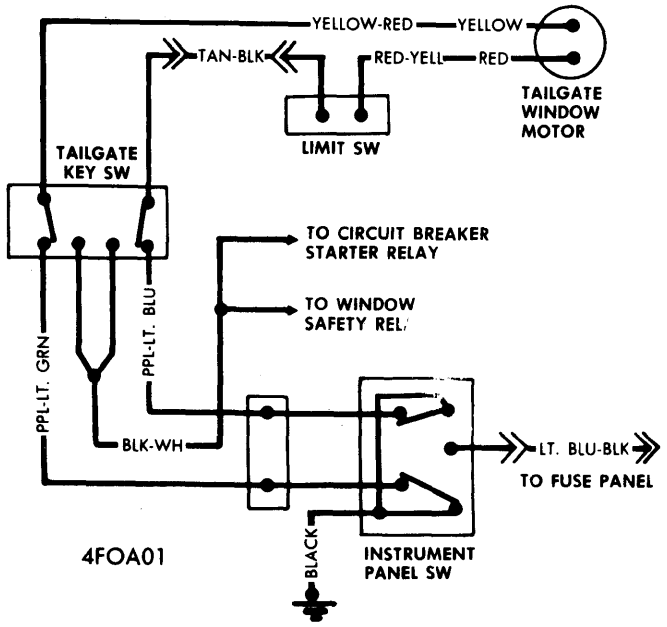

FORD MOTOR CO. POWER TAILGATE WINDOW WIRING

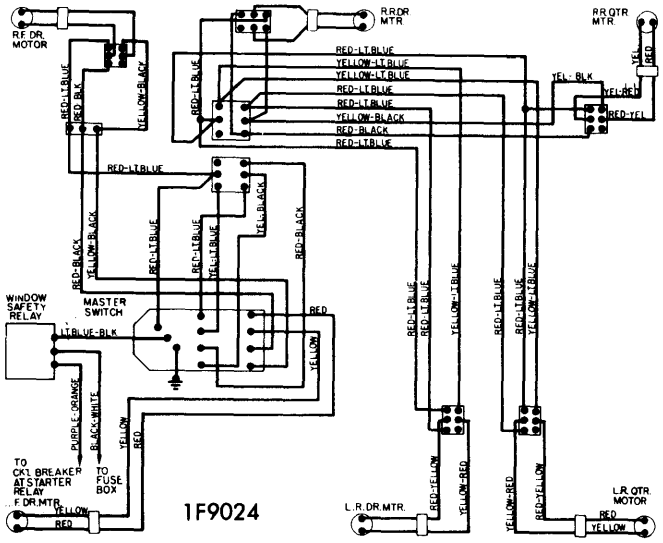

FORD & MERCURY POWER WINDOW WIRING

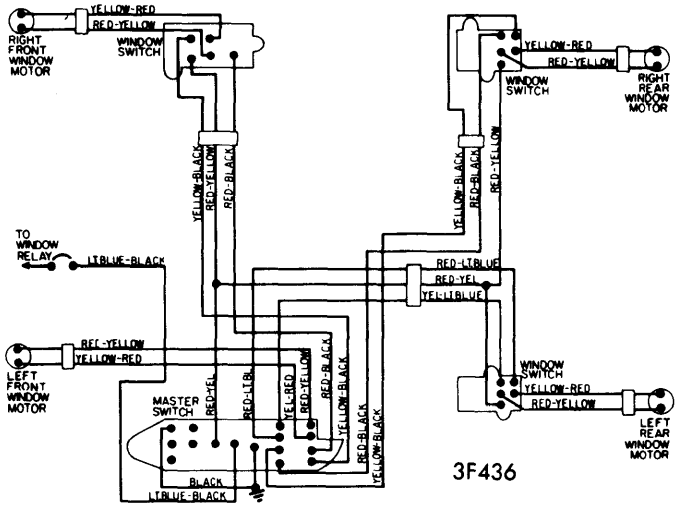

LINCOLN CONTINENTAL POWER WINDOW WIRING

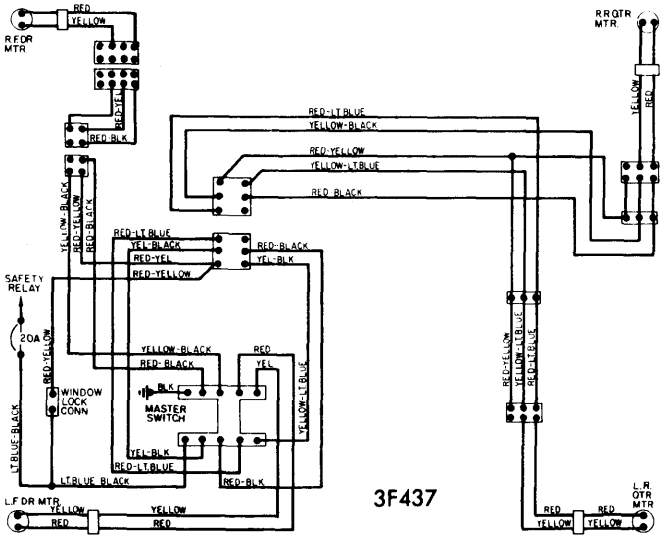

MARK IV & THUNDERBIRD POWER WINDOW WIRING

Copyright (c) 2001 Mitchell Repair Information Company