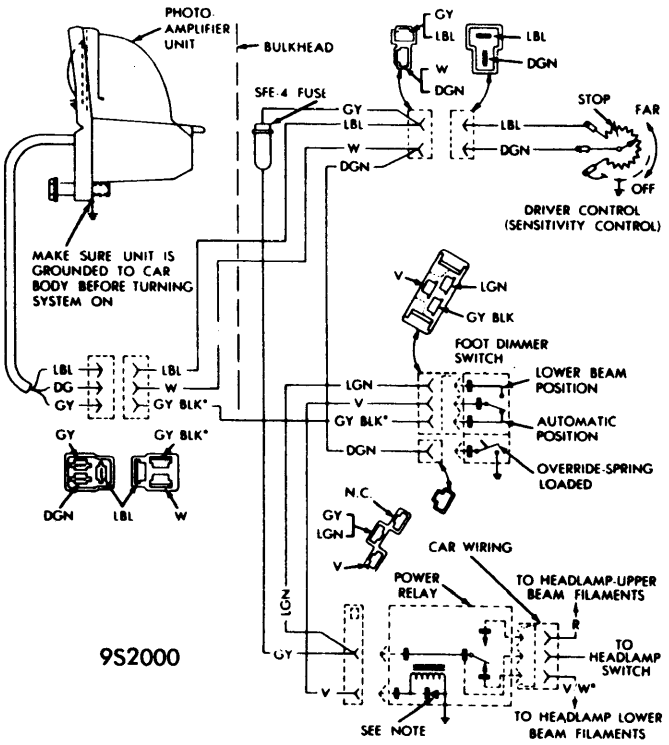

CHRYSLER CORP. AUTOMATIC BEAM CHANGER WIRING

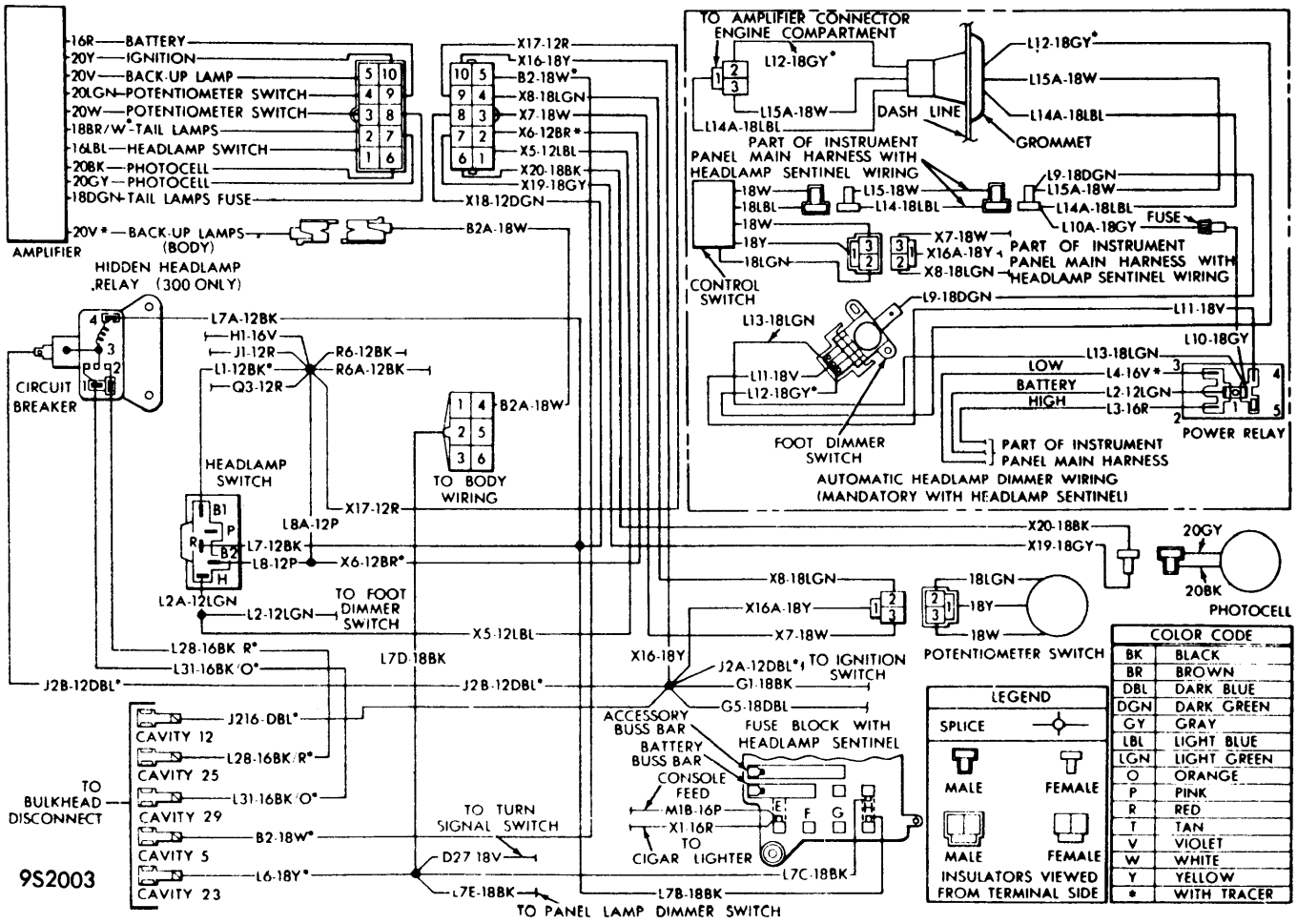

CHRYSLER CORP. SAFEGUARD SENTINEL WIRING

Copyright (c) 2001 Mitchell Repair Information Company