1971 Dodge

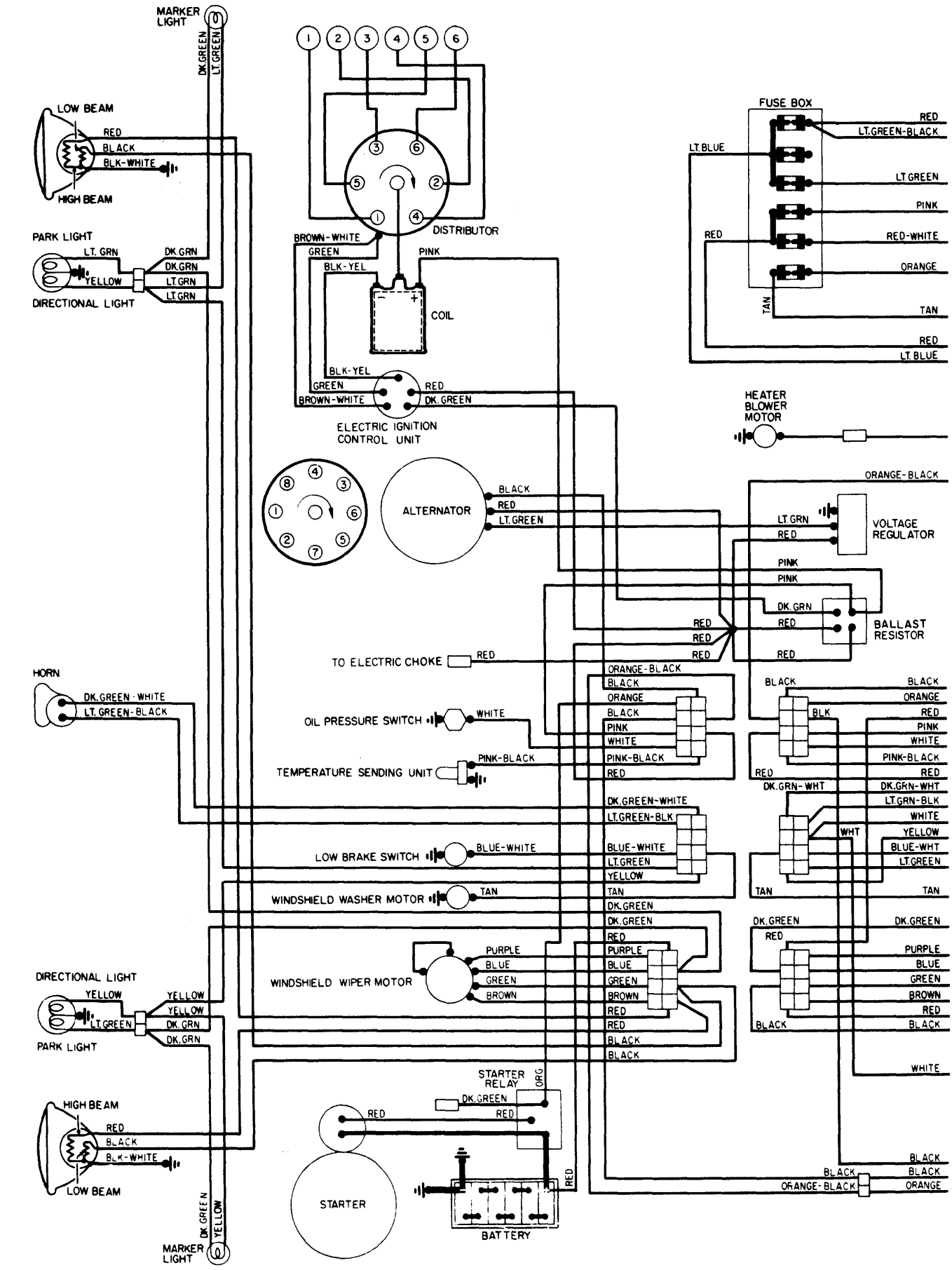

Copyright (c) 2001 Mitchell Repair Information Company

1971 Dodge

"B" Models

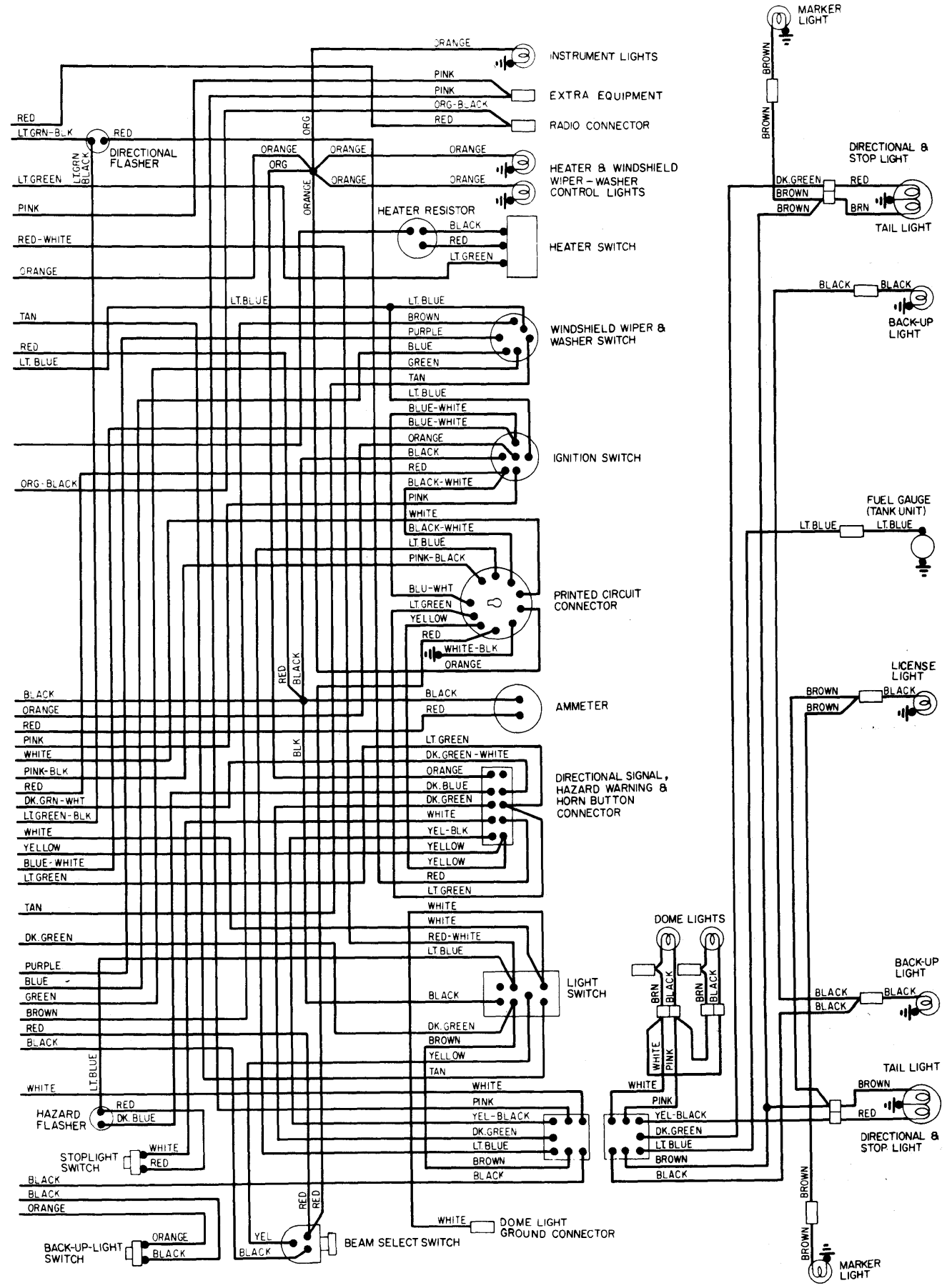

Copyright (c) 2001 Mitchell Repair Information Company