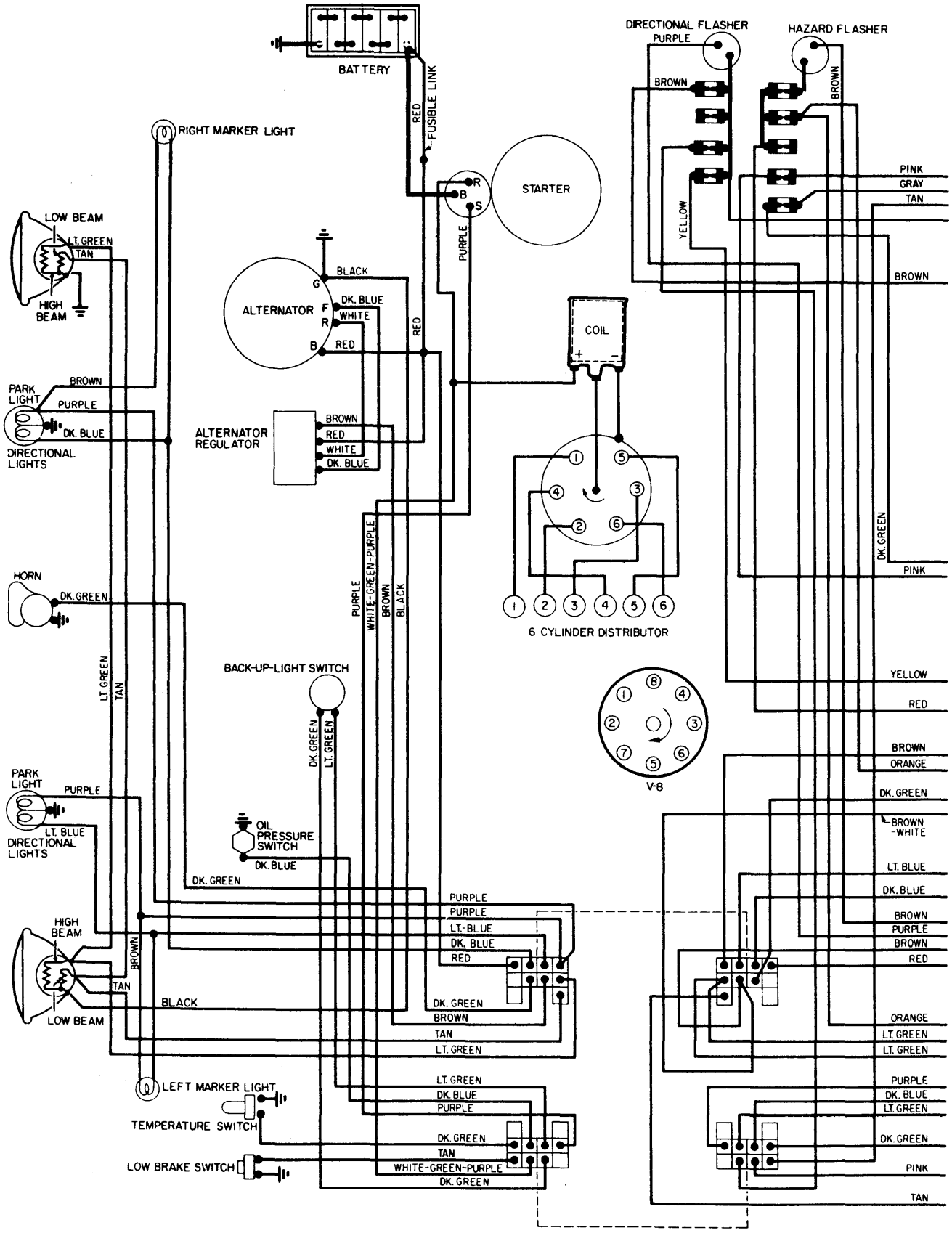

Copyright (c) 2001 Mitchell Repair Information Company

1971 Chevrolet "C" & "K" Models

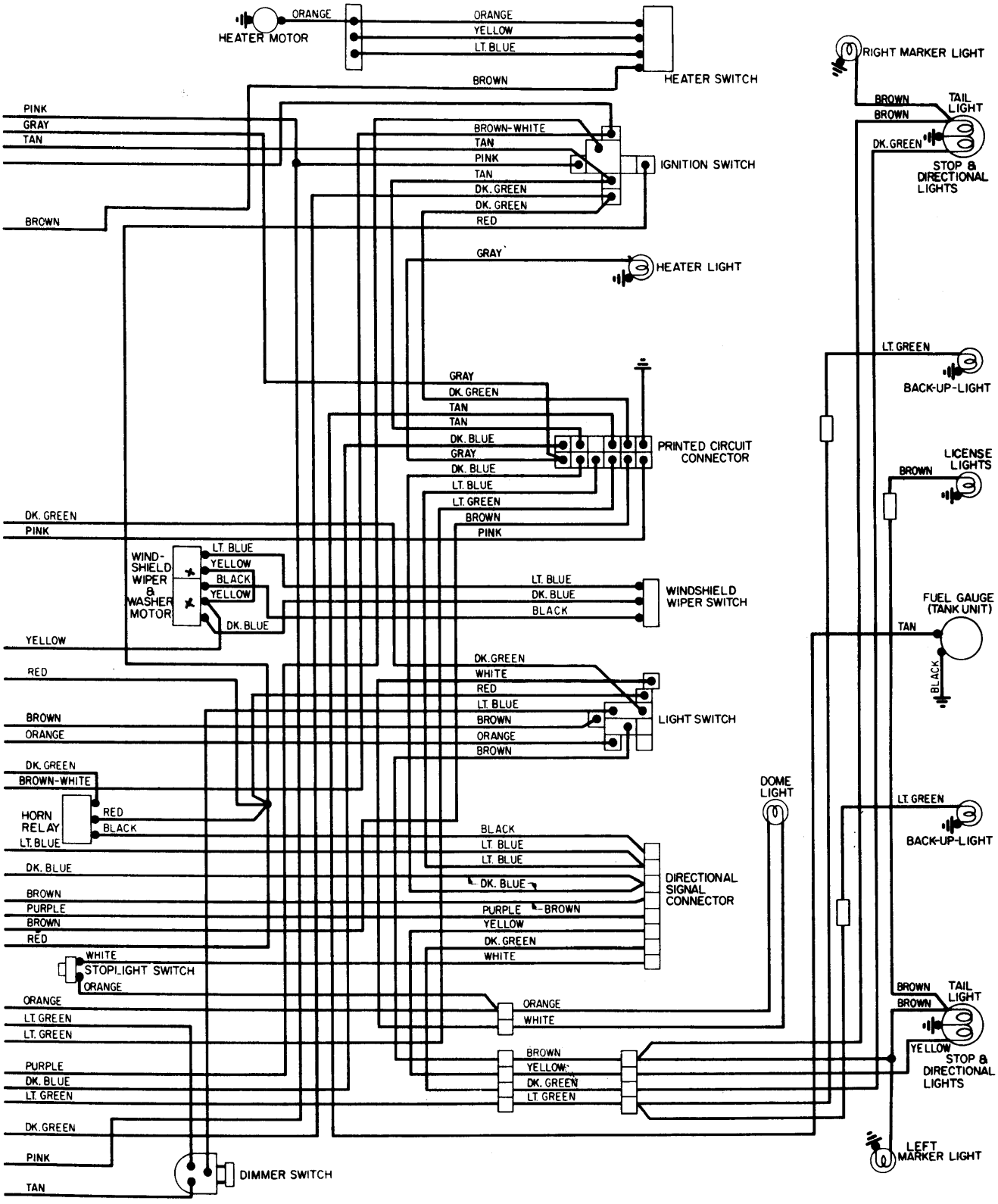

Copyright (c) 2001 Mitchell Repair Information Company