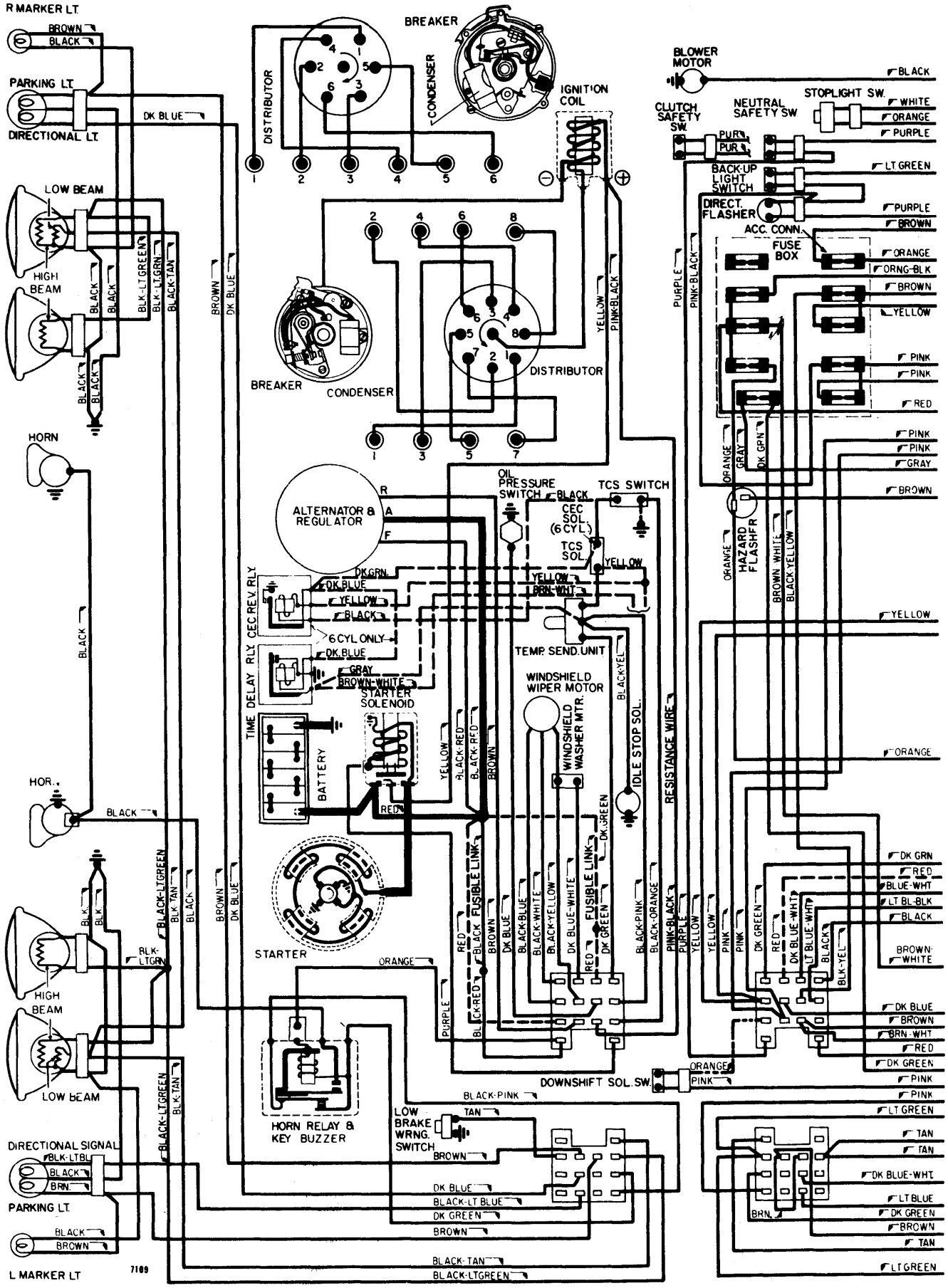

Copyright (c) 2001 Mitchell Repair Information Company

1971 Pontiac T-37, Le Mans, GTO

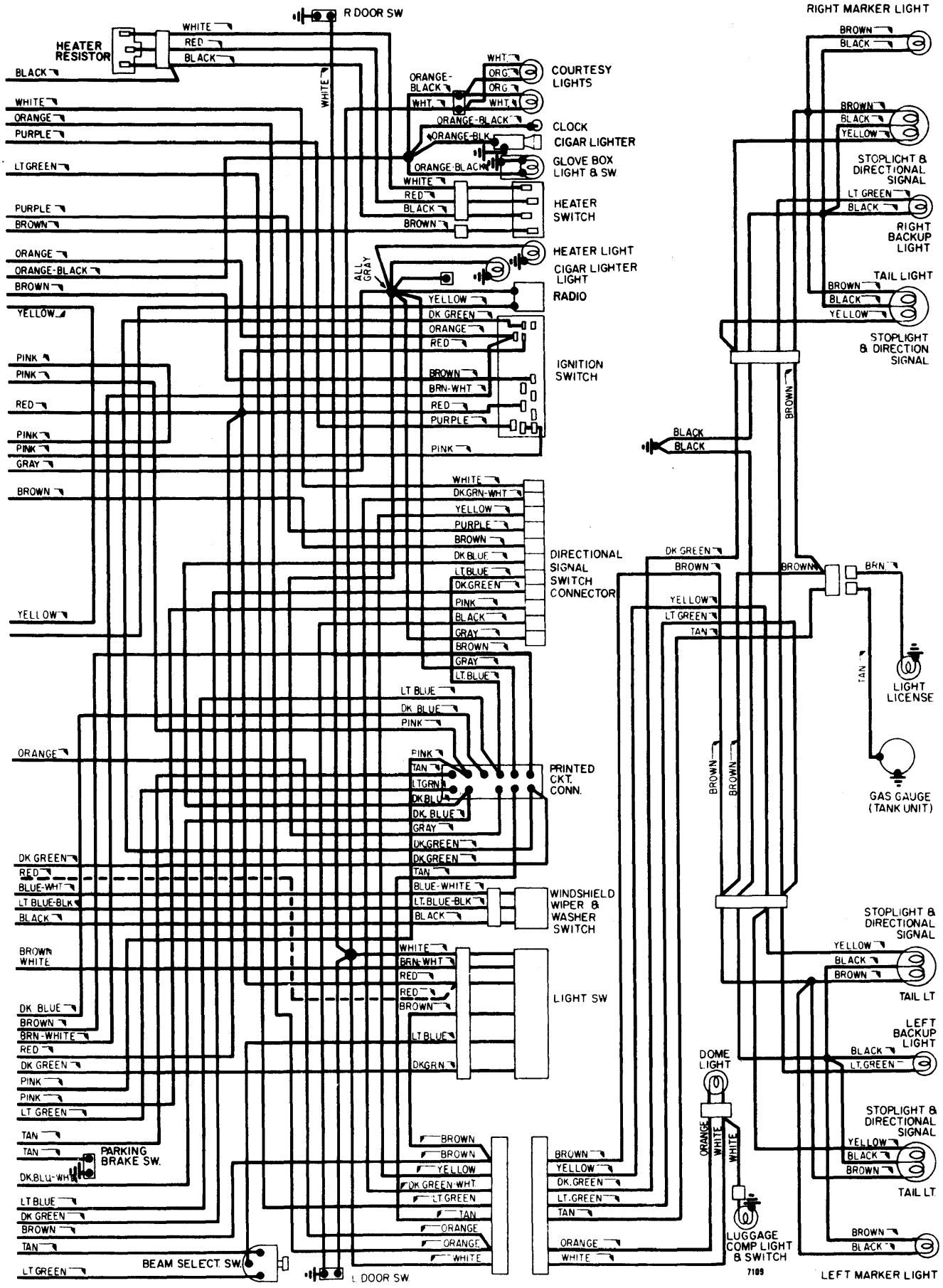

Copyright (c) 2001 Mitchell Repair Information Company