(X) See Sequential Direction Signal Circuit.

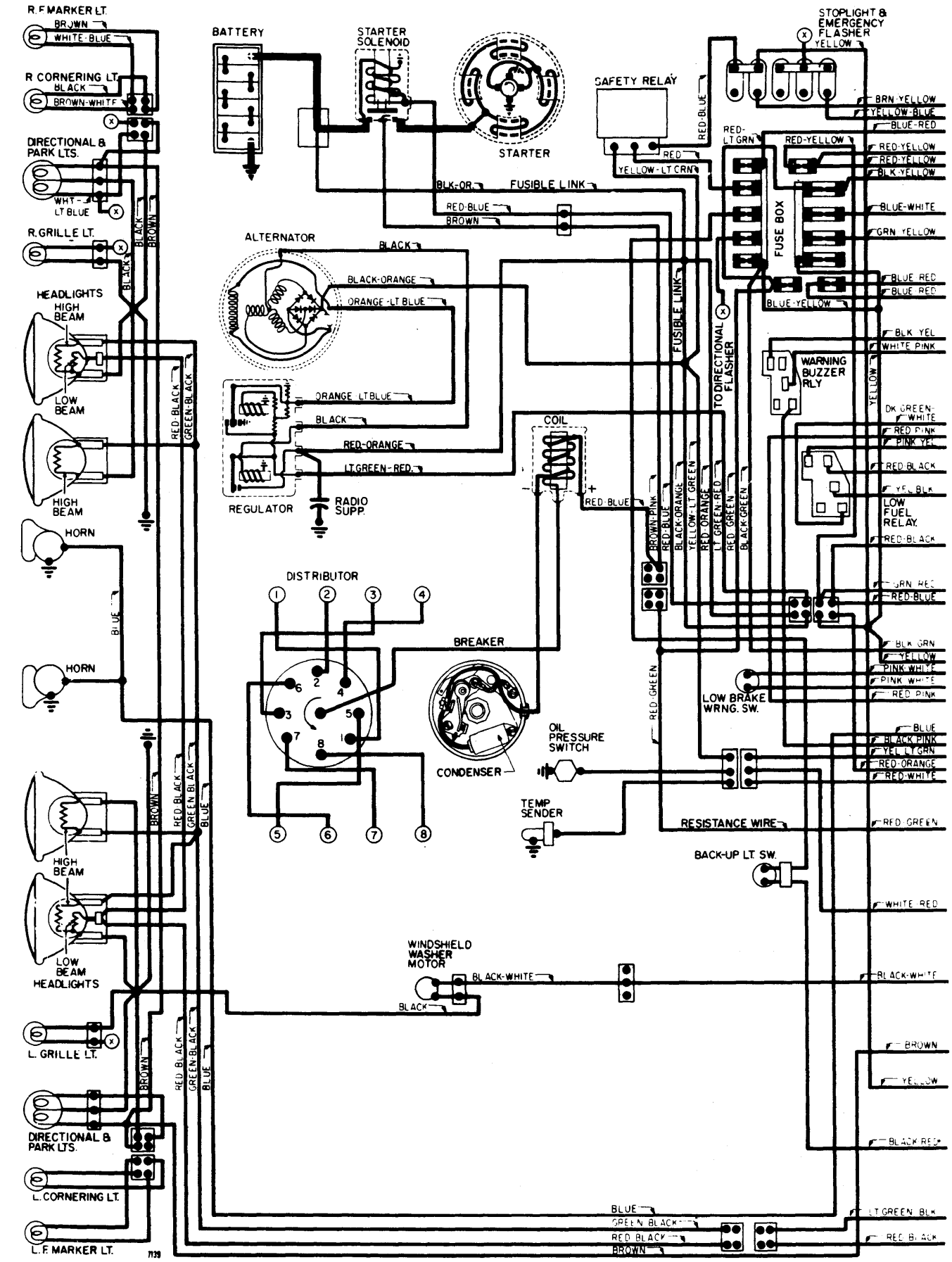

Copyright (c) 2001 Mitchell Repair Information Company

⊗ See Sequential Direction Signal Circuit.

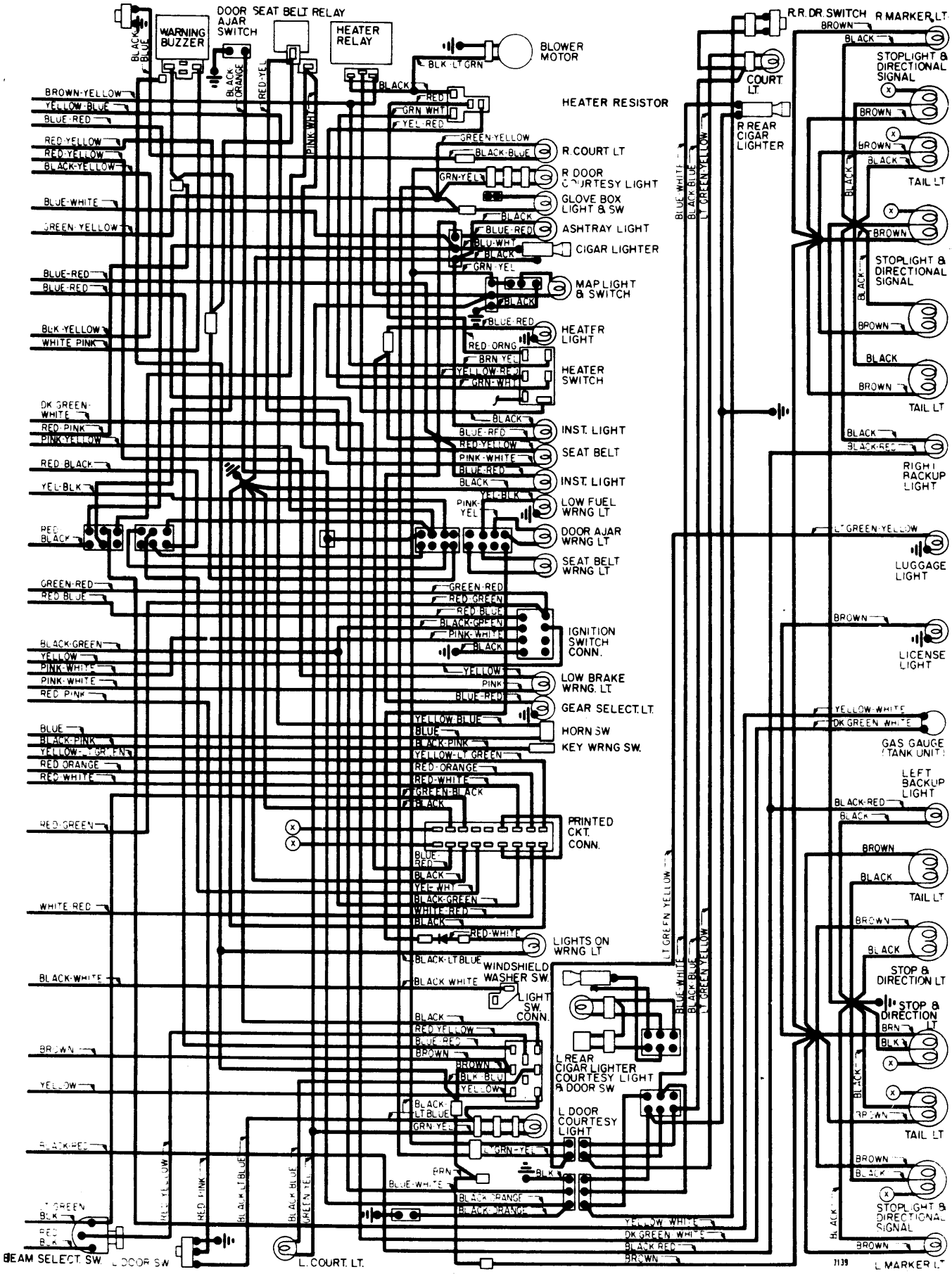

Copyright (c) 2001 Mitchell Repair Information Company