1971 Ford

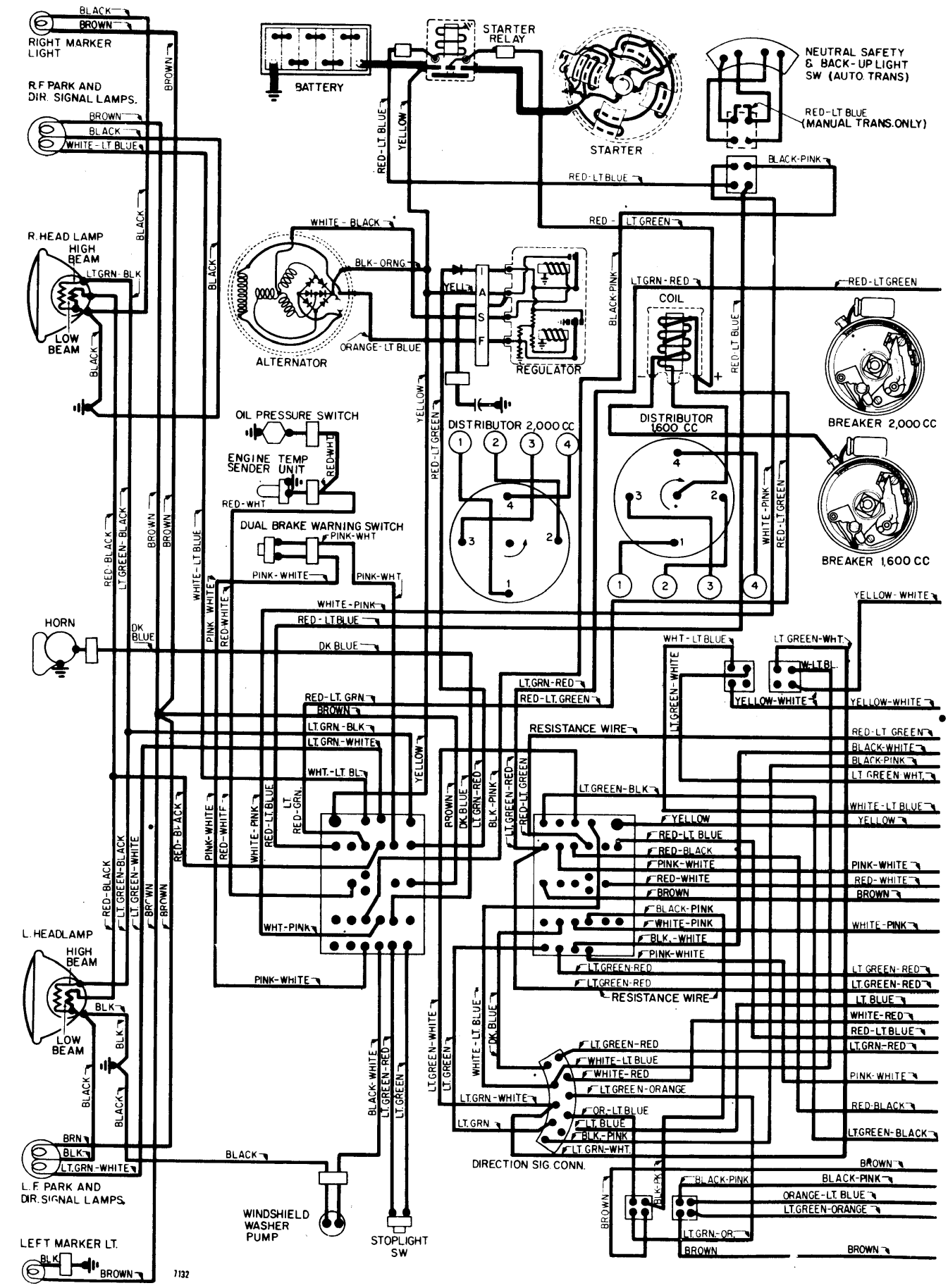

Copyright (c) 2001 Mitchell Repair Information Company

1971 Ford

Pinto

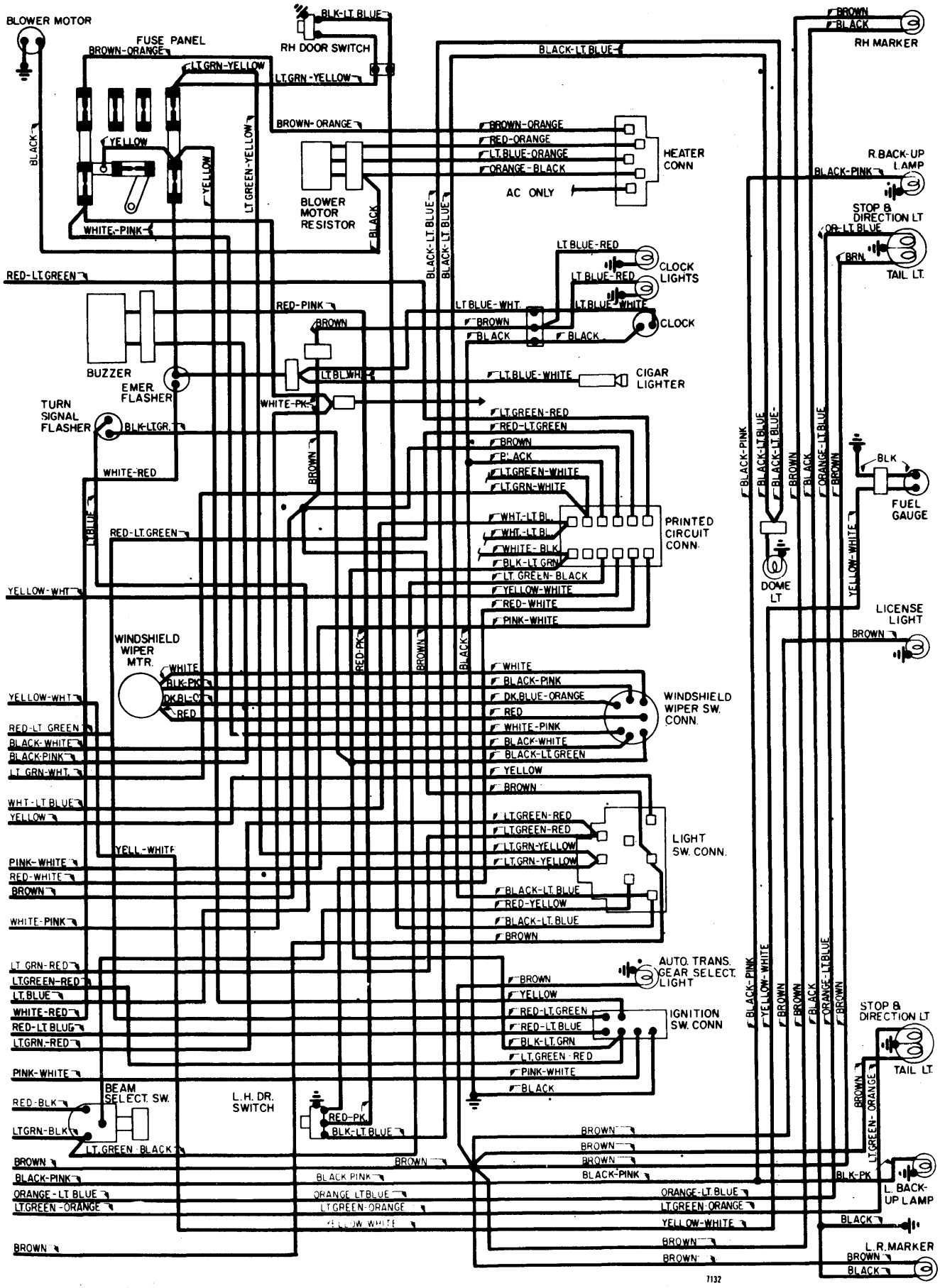

Copyright (c) 2001 Mitchell Repair Information Company