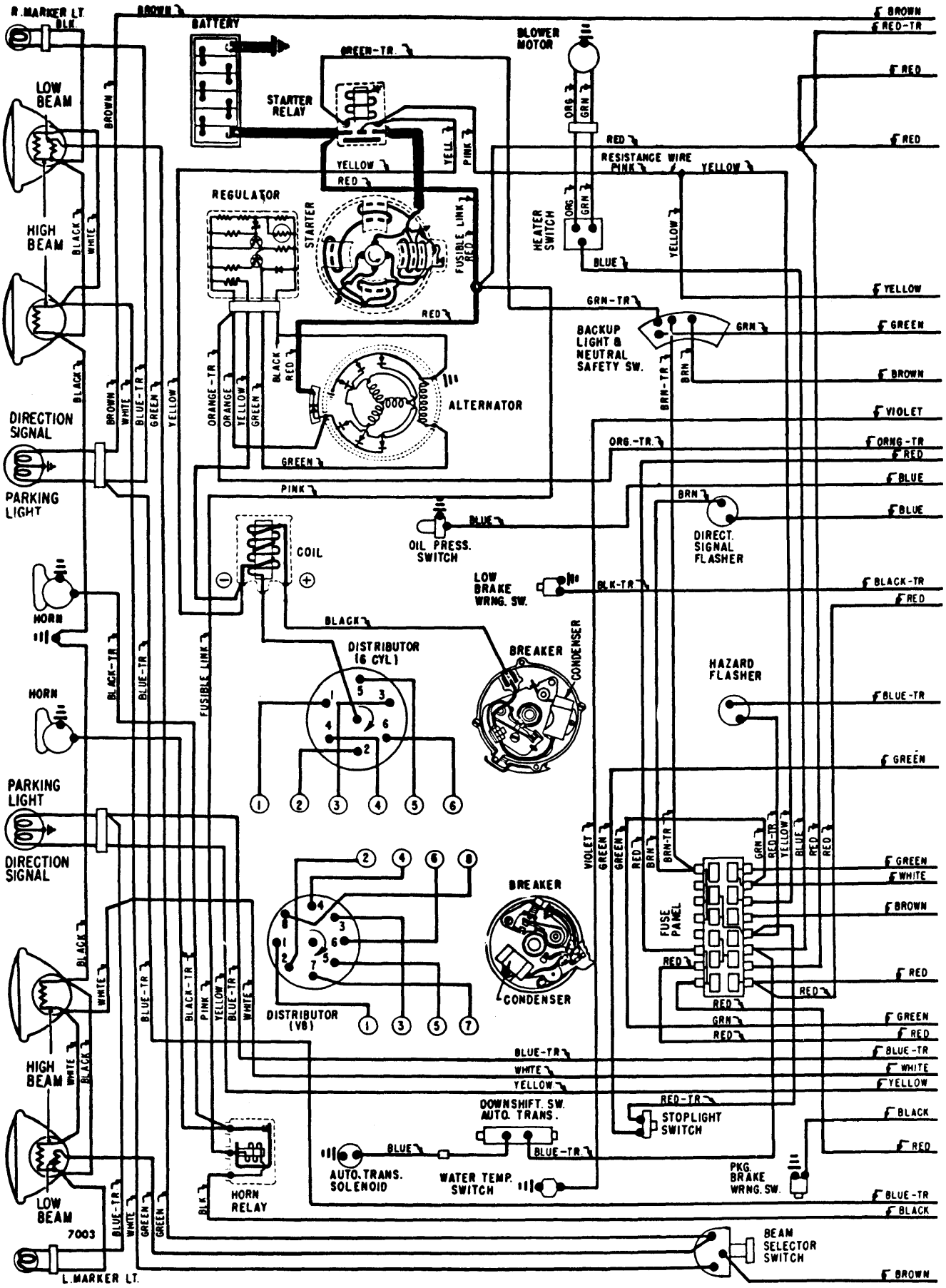
R. MARKER LT.
BLK.
BROWN
BATTERY
BLOWER MOTOR
GREEN-TR.
LOW BEAM
STARTER RELAY
ORG.
GRN.
RED
RESISTANCE WIRE
PINK
YELLOW
YELL.
PINK
REGULATOR
STARTER
FUSIBLE LINK
HEATER SWITCH
BLUE
HIGH BEAM
BLACK
WHITE
GRN-TR.
BACKUP LIGHT & NEUTRAL SAFETY SW.
GRN.
BRN.
BRN-TR.
ORANGE-TR.
ORANGE
YELLOW
GREEN
ALTERNATOR
DIRECTION SIGNAL
PARKING LIGHT
ORG.-TR.
PINK
BRN.
DIRECT. SIGNAL FLASHER
OIL PRESS. SWITCH
COIL
LOW BRAKE WRNG. SW.
BLK-TR.
HORN
BLACK-TR.
BLUE-TR.
FUSIBLE LINK
DISTRIBUTOR (6 CYL)
BREAKER
CONDENSER
HAZARD FLASHER
VIOLET
FUSE PANEL
DISTRIBUTOR (V8)
DOWNSHIFT. SW. AUTO. TRANS.
STOPLIGHT SWITCH
AUTO. TRANS. SOLENOID
WATER TEMP. SWITCH
PKG. BRAKE WRNG. SW.
HORN RELAY
BEAM SELECTOR SWITCH
L. MARKER LT.
7003

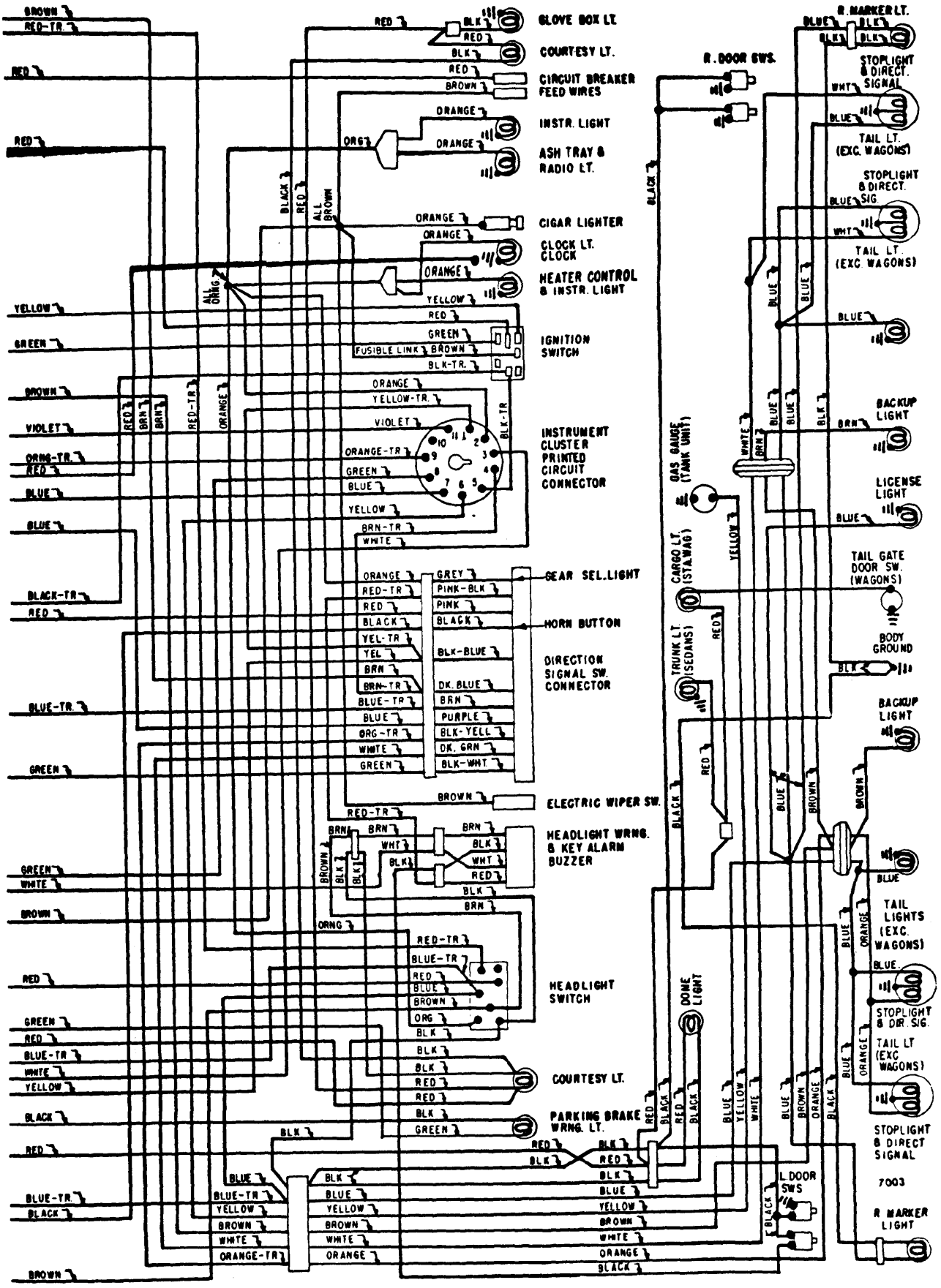
GLOVE BOX LT.
COURTESY LT.
CIRCUIT BREAKER FEED WIRES
INSTR. LIGHT
ASH TRAY & RADIO LT.
CIGAR LIGHTER
CLOCK LT. CLOCK
HEATER CONTROL & INSTR. LIGHT
IGNITION SWITCH
INSTRUMENT CLUSTER PRINTED CIRCUIT CONNECTOR
GEAR SEL. LIGHT
HORN BUTTON
DIRECTION SIGNAL SW. CONNECTOR
ELECTRIC WIPER SW.
HEADLIGHT WRNG. & KEY ALARM BUZZER
HEADLIGHT SWITCH
COURTESY LT.
PARKING BRAKE WRNG. LT.
R. DOOR SWS.
GAS GAUGE (TANK UNIT)
CARGO LT. (STA.WAG)
TRUNK LT. (SEDANS)
DOME LIGHT
L. DOOR SWS
R. MARKER LT.
STOPLIGHT & DIRECT. SIGNAL
TAIL LT. (EXC. WAGONS)
BACKUP LIGHT
LICENSE LIGHT
TAIL GATE DOOR SW. (WAGONS)
BODY GROUND
TAIL LIGHTS (EXC. WAGONS)
STOPLIGHT & DIR. SIG.
TAIL LT (EXC WAGONS)
R MARKER LIGHT
7003