1969 Buick 6 & V8

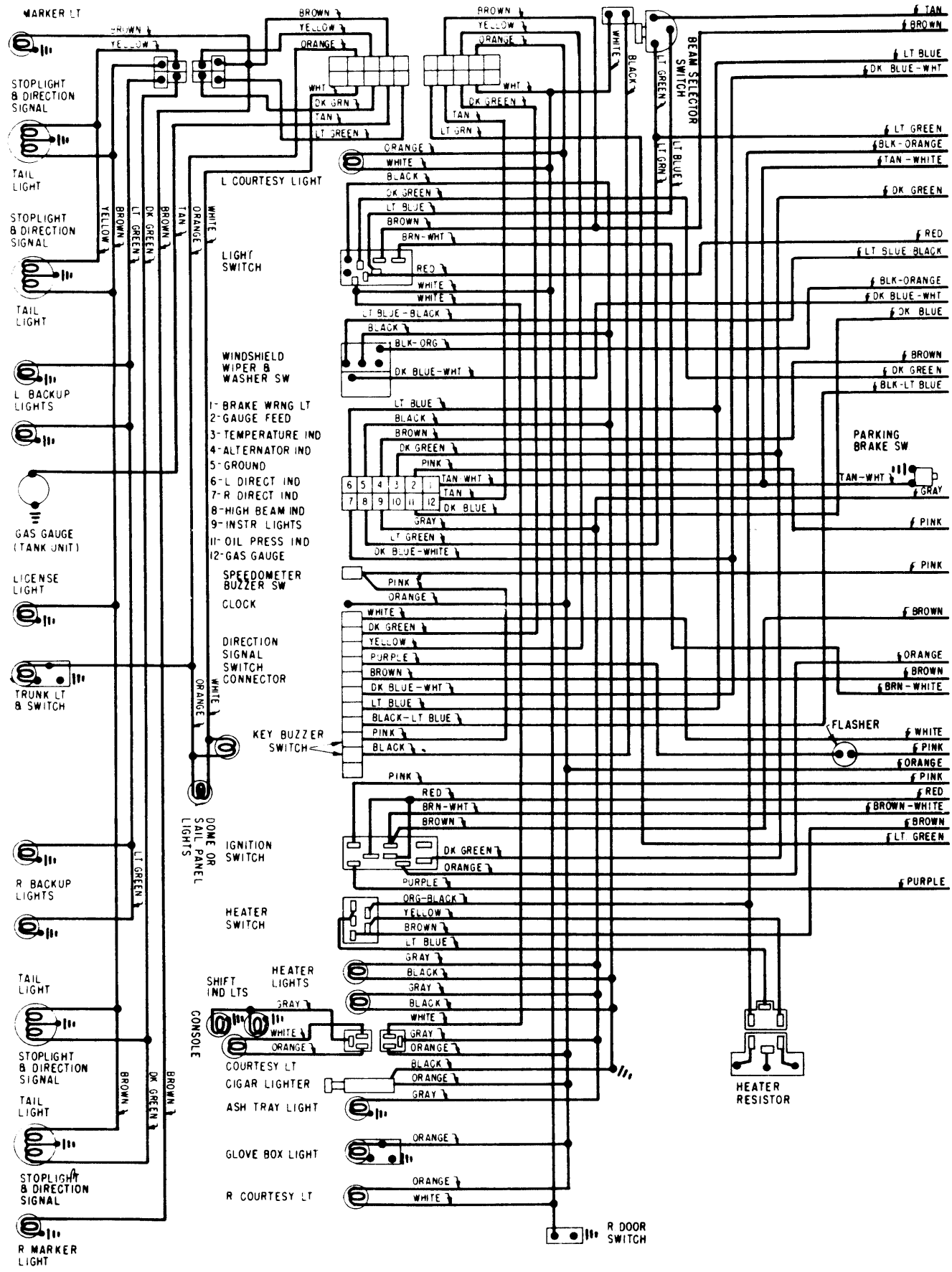

Copyright (c) 2001 Mitchell Repair Information Company

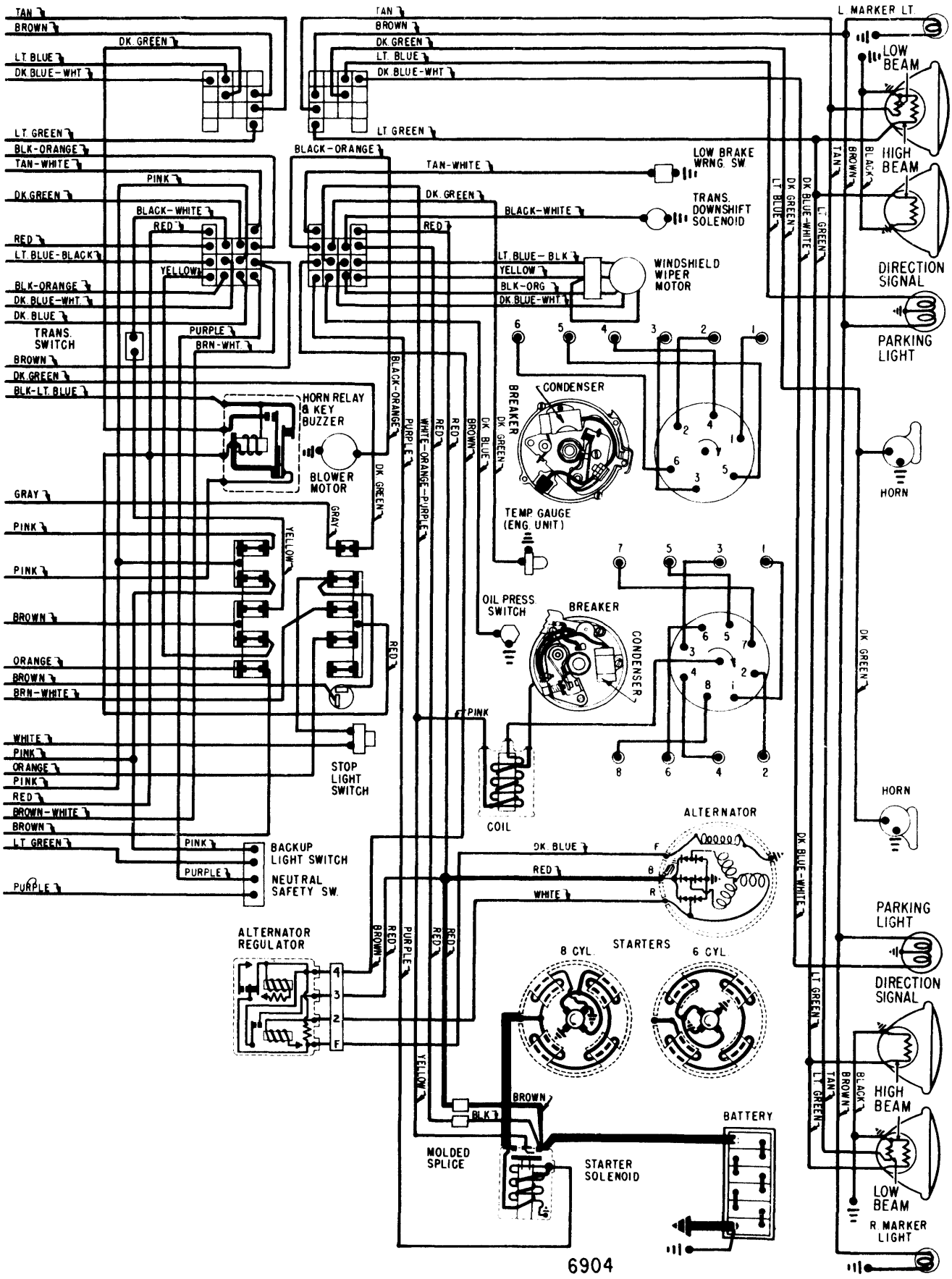

Copyright (c) 2001 Mitchell Repair Information Company