"J" Models (With 327" V8)

1966 Jeep

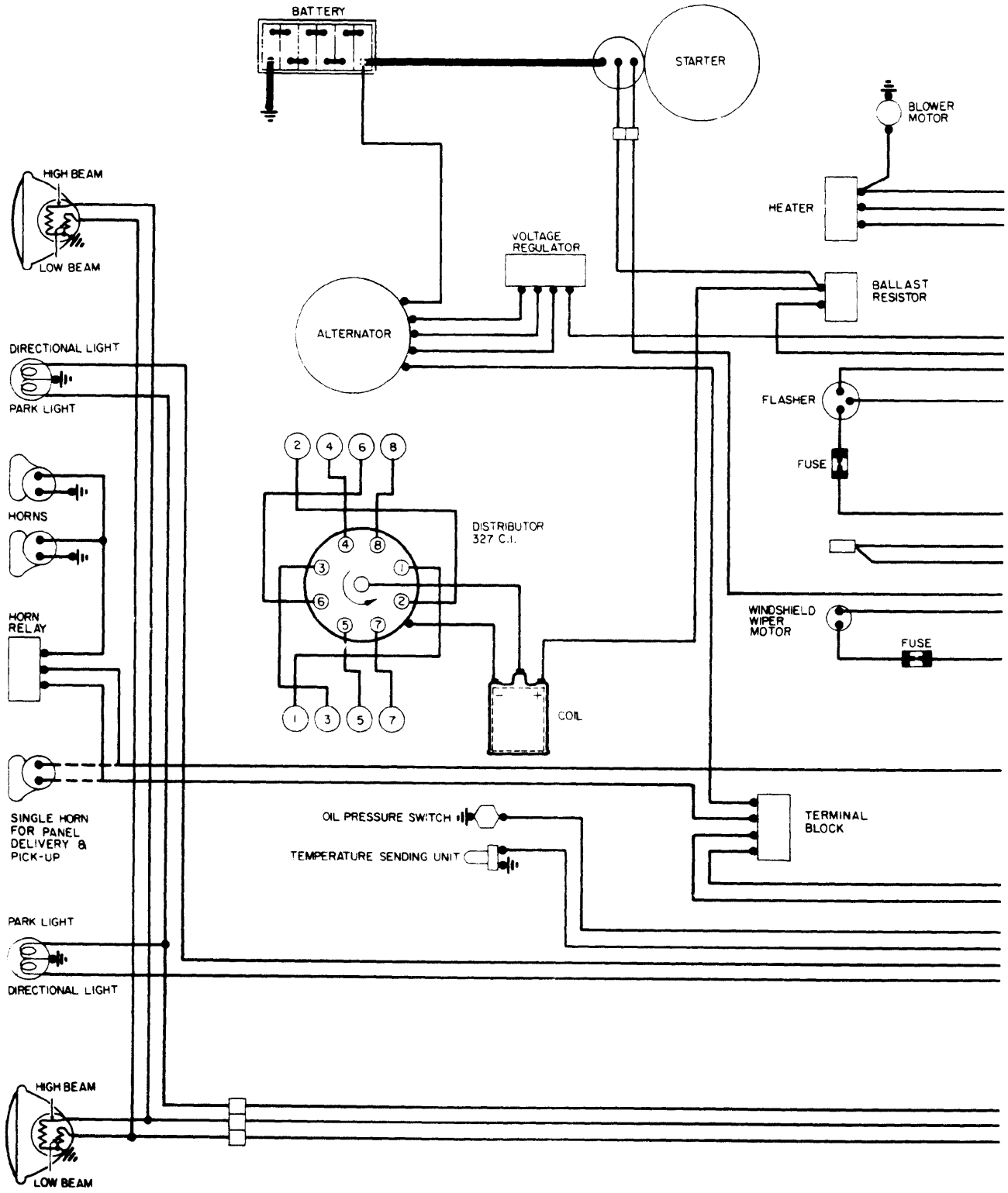

Copyright (c) 2001 Mitchell Repair Information Company

1966 Jeep "J" Models (With 327" V8)

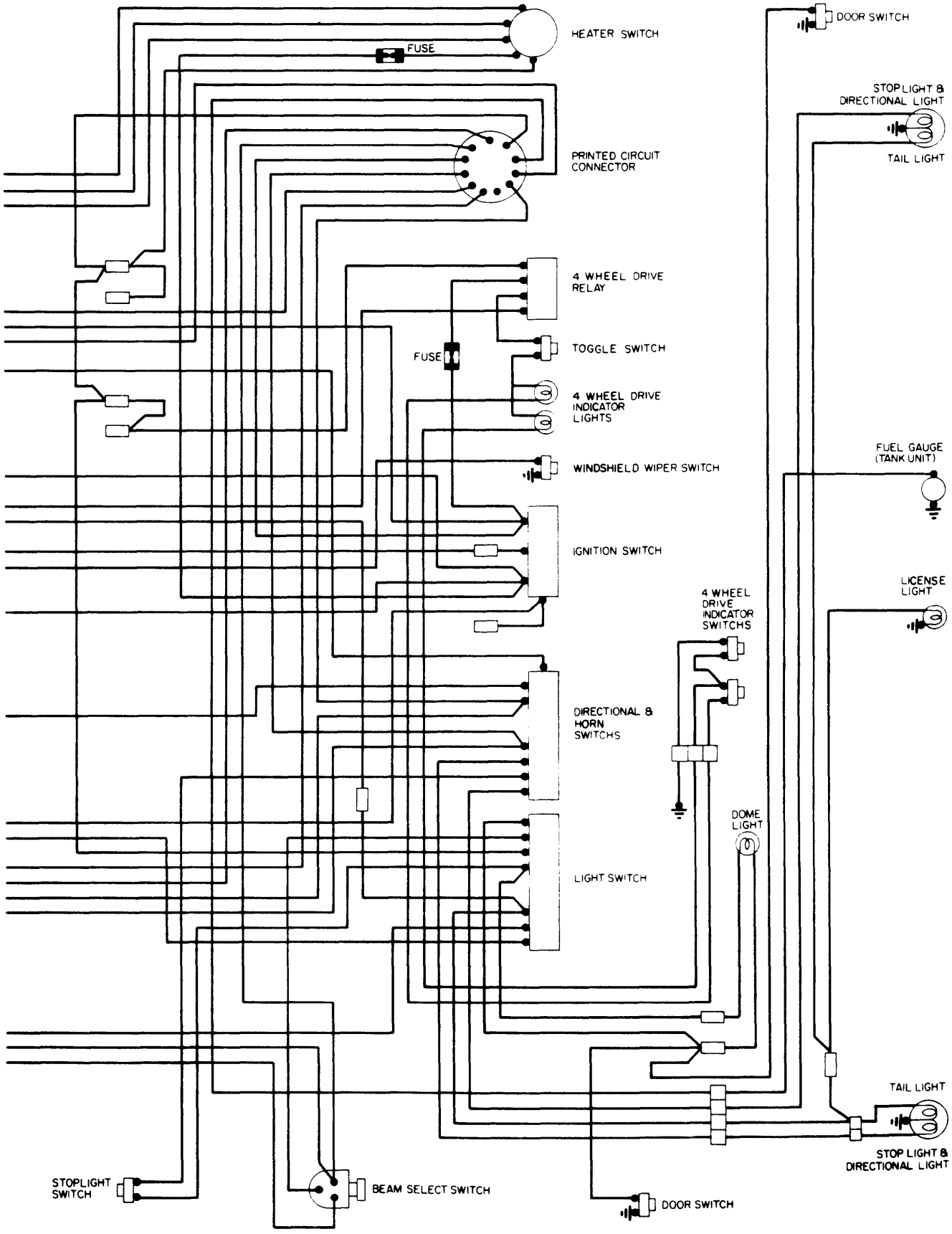

Copyright (c) 2001 Mitchell Repair Information Company