1966 Electric Window Controls

FORD MOTOR CO.

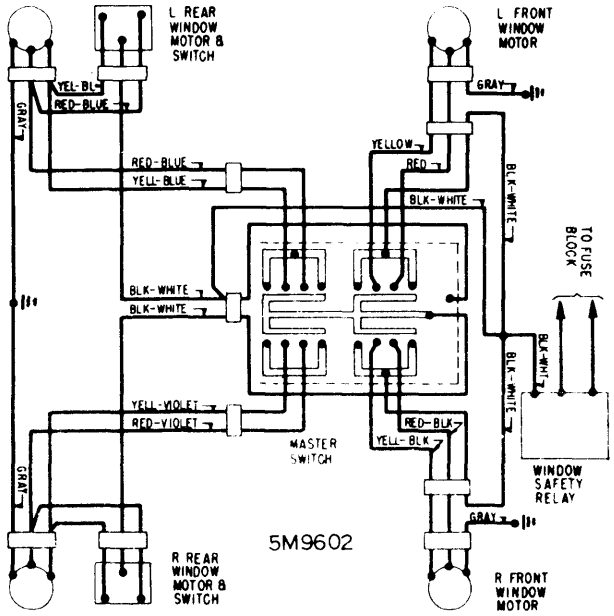

1965-66 THUNDERBIRD

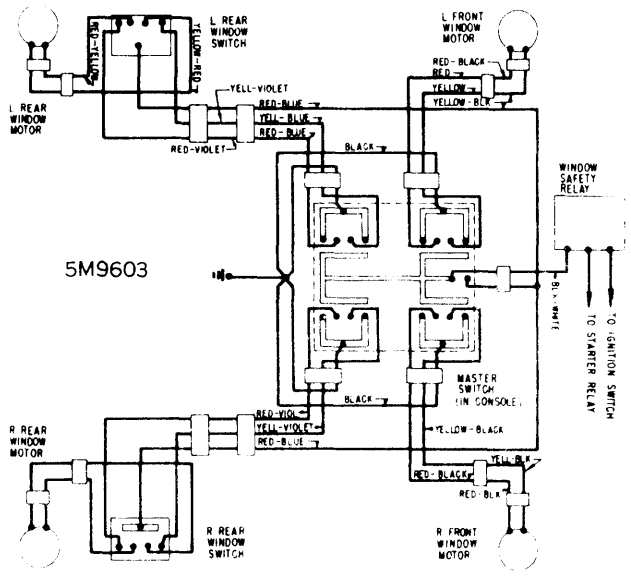

1965-67 FORD (WITH CONSOLE)

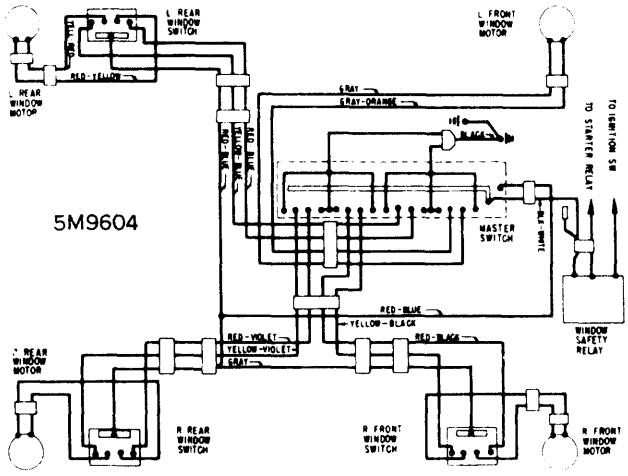

1965-66 FORD (WITHOUT CONSOLE)

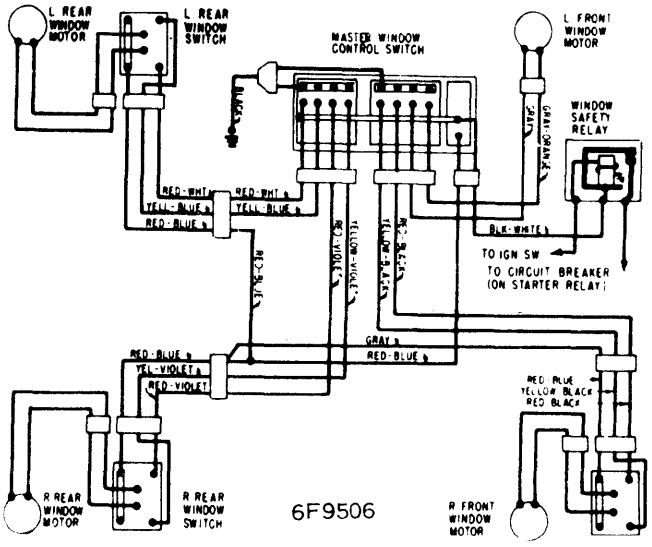

1966-67 COMET

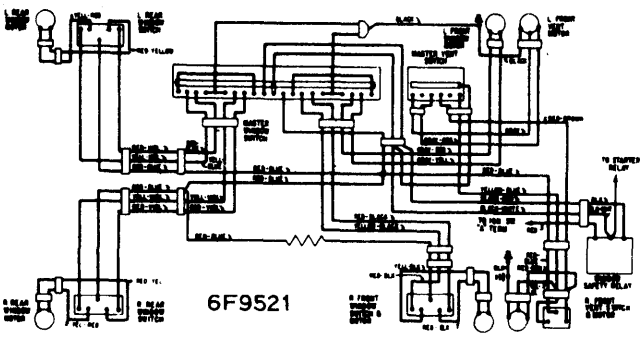

1966-67 MERCURY SEDAN REAR WINDOW

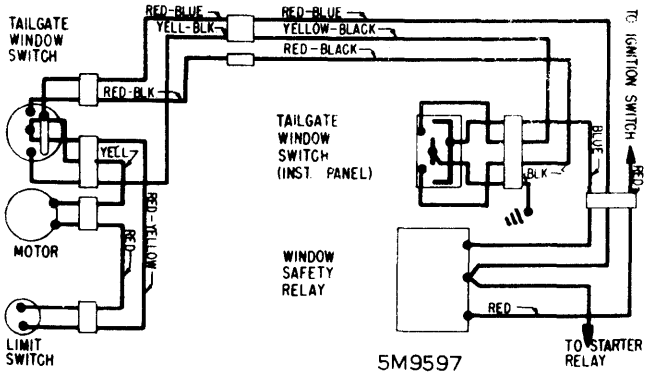

1965-67 FORD & MERCURY TAILGATE

Copyright (c) 2001 Mitchell Repair Information Company

1966 Electric Window Controls

FORD MOTOR CO. (Continued)

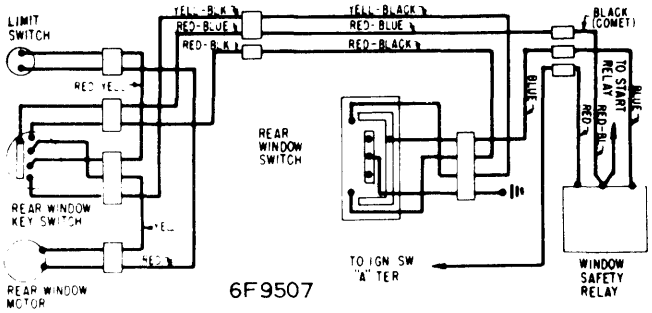

1966-67 COMET, FALCON & FAIRLANE TAILGATE

GENERAL MOTORS

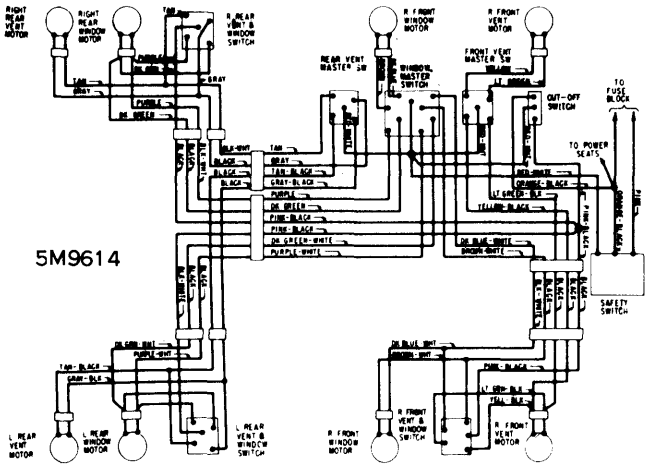

1965-66 CADILLAC 6-WINDOW SEDAN

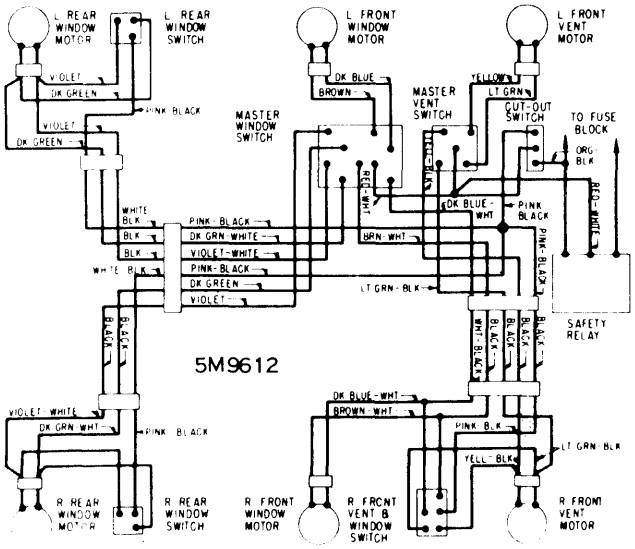

1965-66 CADILLAC (EXC. 6-WINDOW SEDAN)

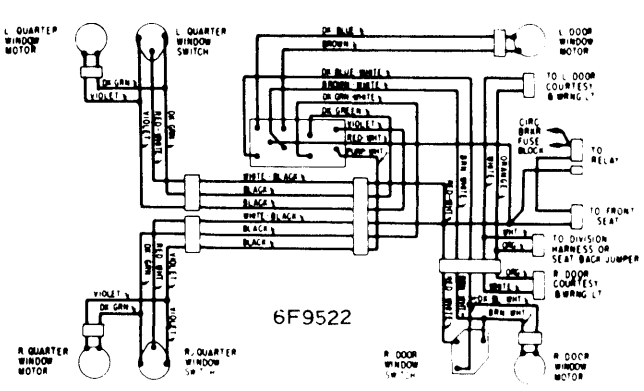

1966 OLDSMOBILE TORONADO

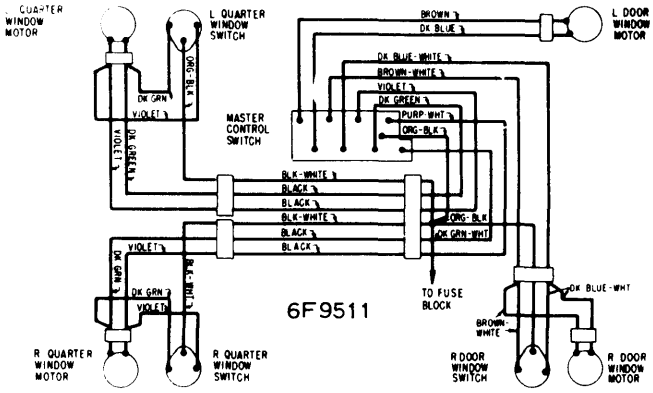

1966 BUICK RIVIERA

Copyright (c) 2001 Mitchell Repair Information Company