1965 Convertible Top Controls

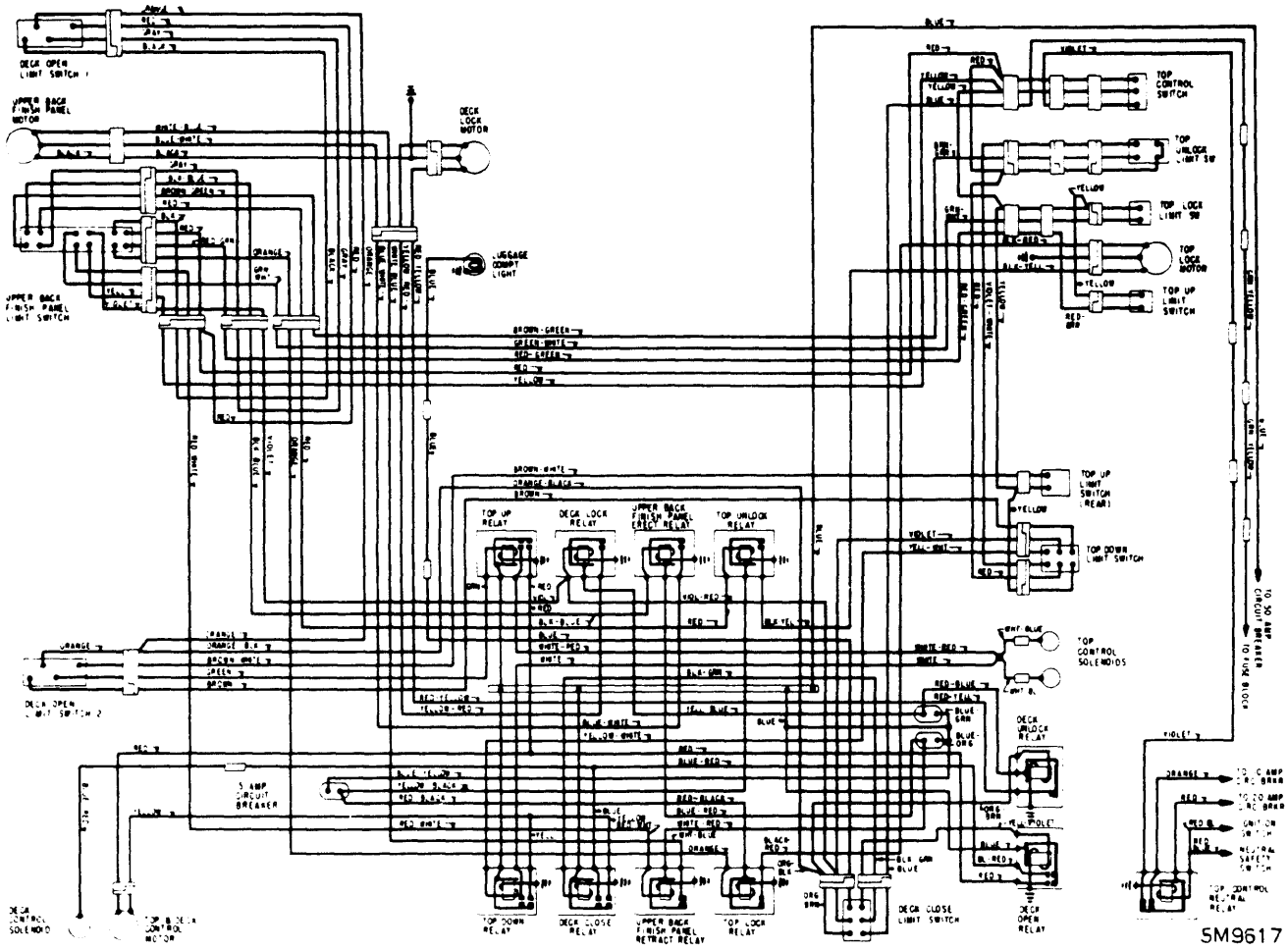

1965 LINCOLN CONTINENTAL CONVERTIBLE TOP

Copyright (c) 2001 Mitchell Repair Information Company