1965 Chevrolet 6 & V8

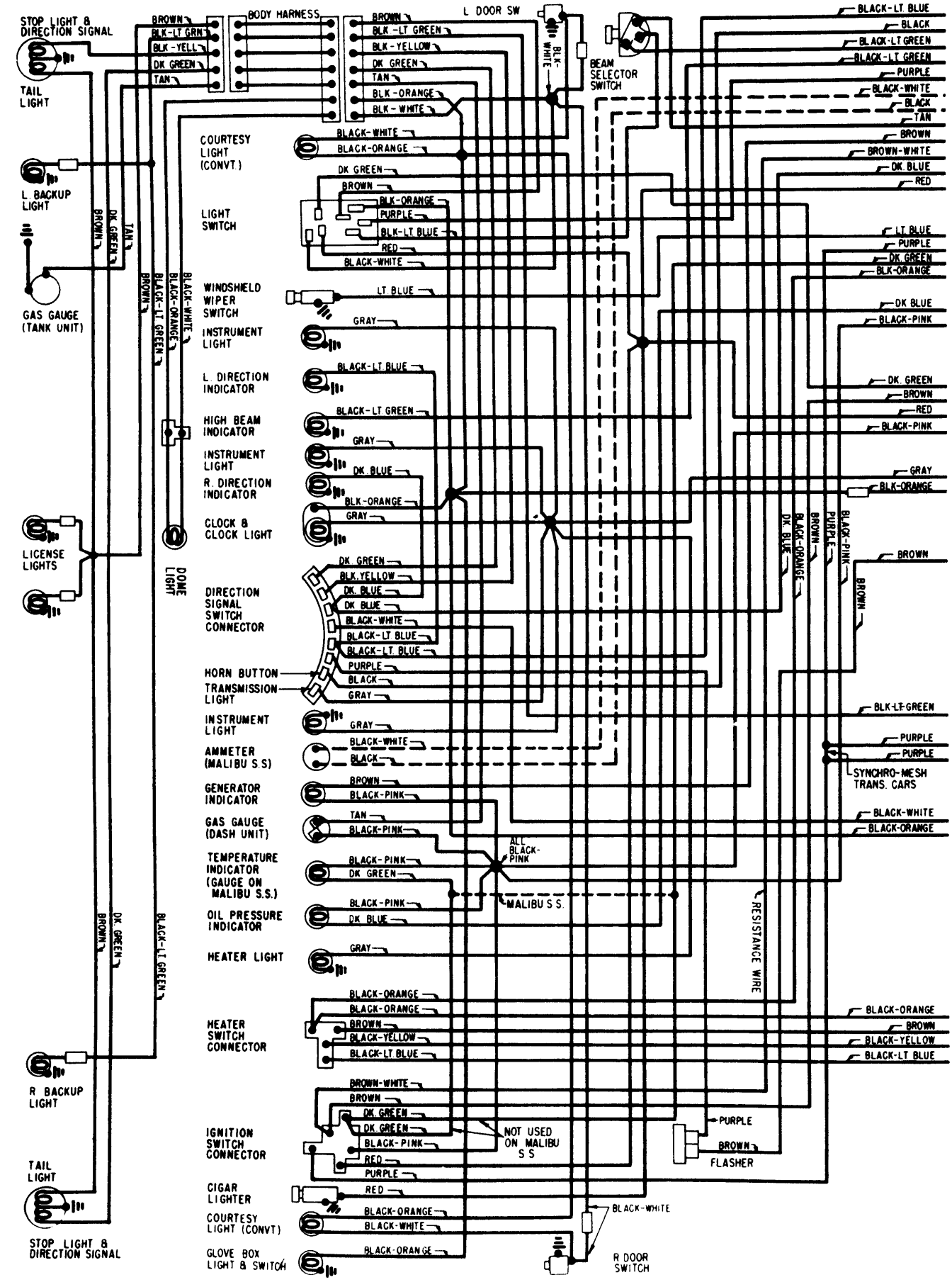
STOP LIGHT & DIRECTION SIGNAL
TAIL LIGHT
L. BACKUP LIGHT
GAS GAUGE (TANK UNIT)
LICENSE LIGHTS
R BACKUP LIGHT
TAIL LIGHT
STOP LIGHT & DIRECTION SIGNAL
BROWN
BLK-LT GRN
BLK-YELL
DK GREEN
TAN
BODY HARNESS
BROWN
BLK-LT GREEN
BLK-YELLOW
DK GREEN
TAN
BLK-ORANGE
BLK-WHITE
L DOOR SW
BLK-WHITE
BEAM SELECTOR SWITCH
BLACK-LT BLUE
BLACK
BLACK-LT GREEN
BLACK-LT GREEN
PURPLE
BLACK-WHITE
BLACK
TAN
BROWN
BROWN-WHITE
DK BLUE
RED
COURTESY LIGHT (CONVT.)
BLACK-WHITE
BLACK-ORANGE
LIGHT SWITCH
DK GREEN
BROWN
BLK-ORANGE
PURPLE
BLK-LT BLUE
RED
BLACK-WHITE
WINDSHIELD WIPER SWITCH
LT BLUE
INSTRUMENT LIGHT
GRAY
L. DIRECTION INDICATOR
BLACK-LT BLUE
HIGH BEAM INDICATOR
BLACK-LT GREEN
INSTRUMENT LIGHT
GRAY
R. DIRECTION INDICATOR
DK BLUE
CLOCK & CLOCK LIGHT
BLK-ORANGE
GRAY
DOME LIGHT
DIRECTION SIGNAL SWITCH CONNECTOR
DK GREEN
BLK.YELLOW
DK. BLUE
DK BLUE
BLACK-WHITE
BLACK-LT BLUE
BLACK-LT BLUE
PURPLE
BLACK
GRAY
HORN BUTTON
TRANSMISSION LIGHT
INSTRUMENT LIGHT
GRAY
AMMETER (MALIBU S.S)
BLACK-WHITE
BLACK
GENERATOR INDICATOR
BROWN
BLACK-PINK
GAS GAUGE (DASH UNIT)
TAN
BLACK-PINK
TEMPERATURE INDICATOR (GAUGE ON MALIBU S.S.)
BLACK-PINK
DK GREEN
ALL BLACK-PINK
MALIBU S.S.
OIL PRESSURE INDICATOR
BLACK-PINK
DK BLUE
HEATER LIGHT
GRAY
HEATER SWITCH CONNECTOR
BLACK-ORANGE
BLACK-ORANGE
BROWN
BLACK-YELLOW
BLACK-LT BLUE
IGNITION SWITCH CONNECTOR
BROWN-WHITE
BROWN
DK GREEN
DK GREEN
BLACK-PINK
RED
PURPLE
NOT USED ON MALIBU S.S.
CIGAR LIGHTER
RED
COURTESY LIGHT (CONVT)
BLACK-ORANGE
BLACK-WHITE
GLOVE BOX LIGHT & SWITCH
BLACK-ORANGE
BLACK-WHITE
R DOOR SWITCH
PURPLE
BROWN
FLASHER
RESISTANCE WIRE
LT BLUE
PURPLE
DK GREEN
BLK-ORANGE
DK BLUE
BLACK-PINK
DK. GREEN
BROWN
RED
BLACK-PINK
GRAY
BLK-ORANGE
BROWN
BLK-LT GREEN
PURPLE
PURPLE
SYNCHRO-MESH TRANS. CARS
BLACK-WHITE
BLACK-ORANGE
BLACK-ORANGE
BROWN
BLACK-YELLOW
BLACK-LT BLUE
BROWN
DK GREEN
BLACK-LT GREEN
BLACK-ORANGE
BROWN
BLACK-WHITE
BROWN
BLACK-PINK
BROWN
BLACK-PINK
BROWN
BROWN
BROWN

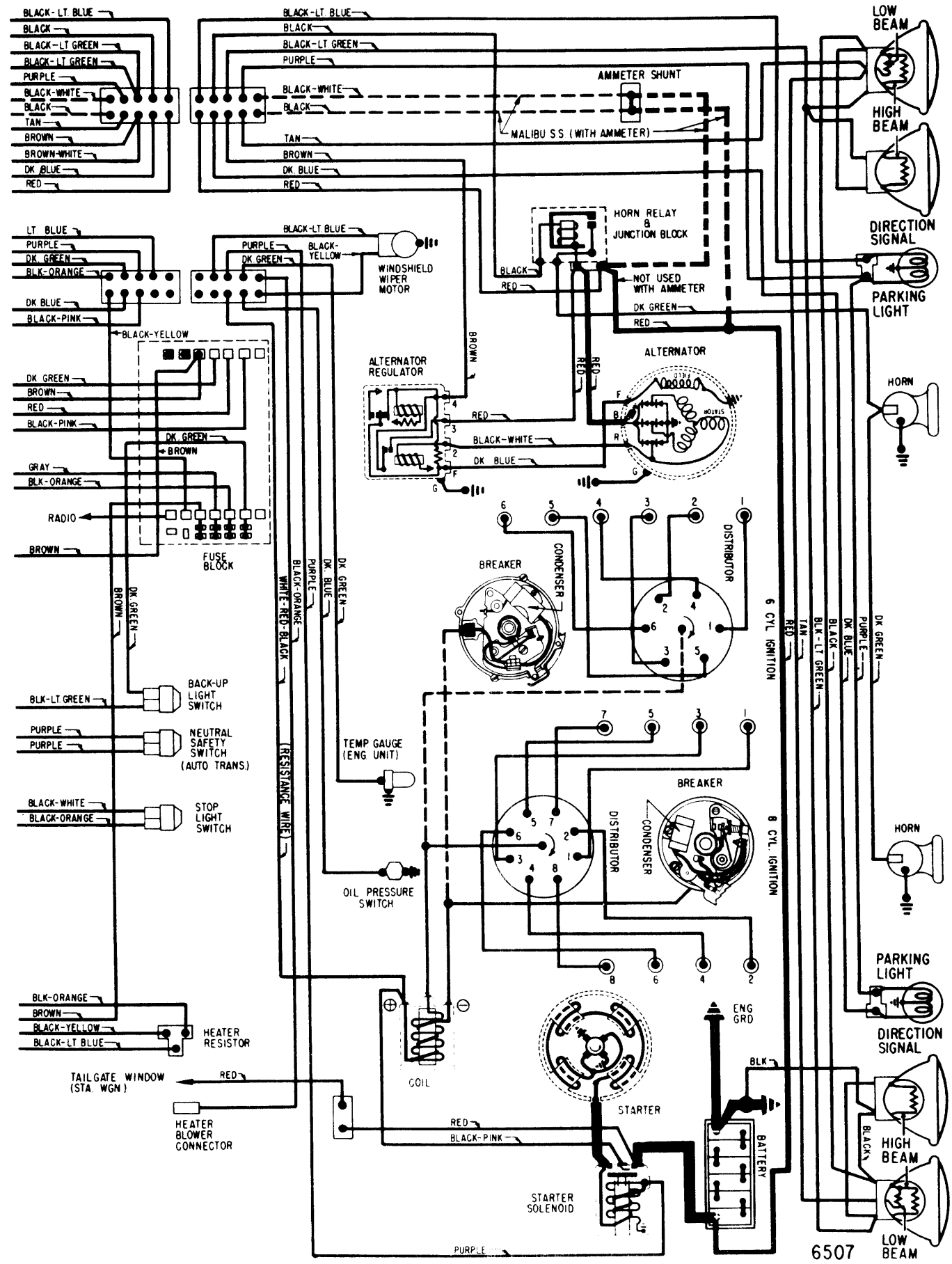

Copyright (c) 2001 Mitchell Repair Information Company