1961 Cadillac V8

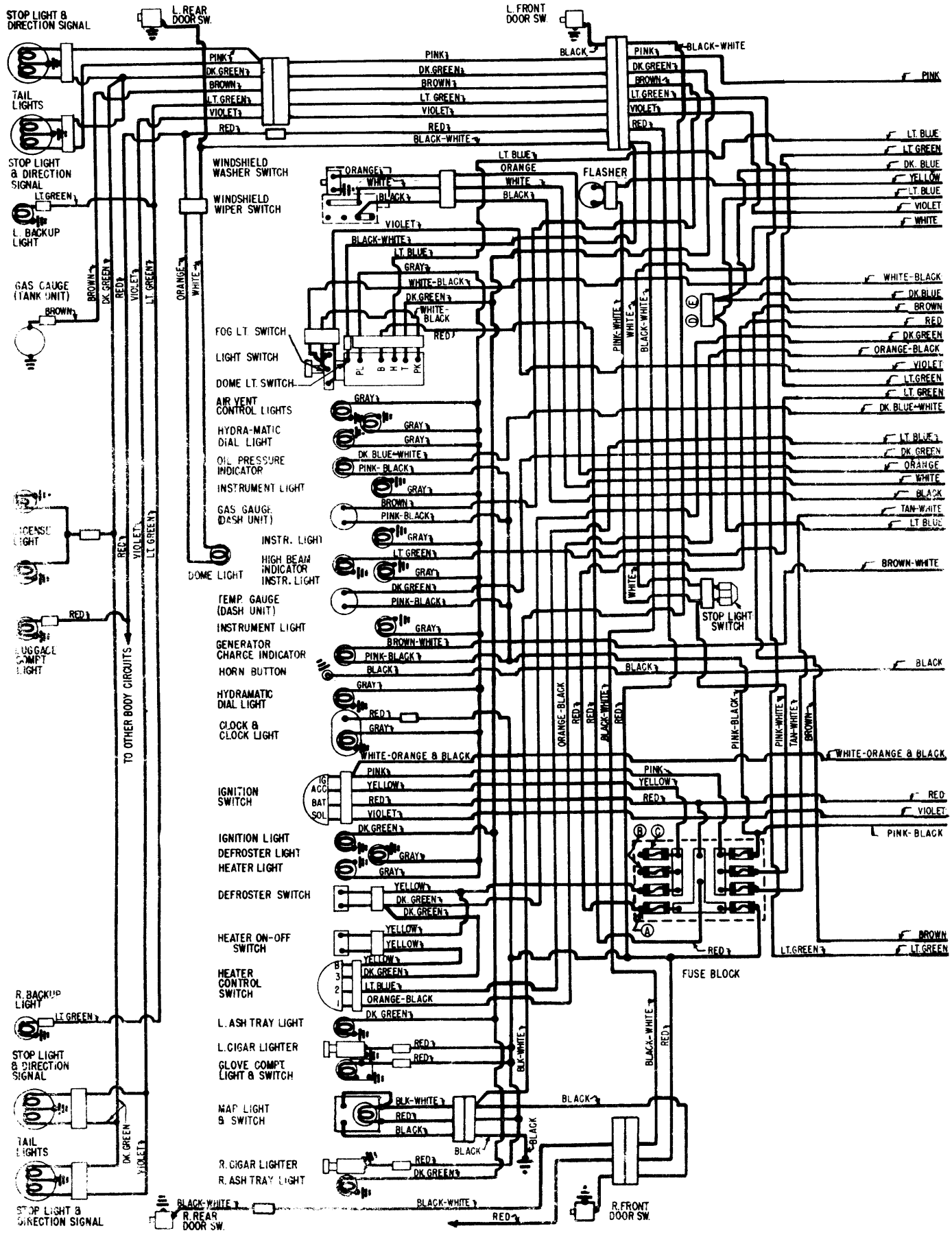

Ⓐ - Trunk Lid Lock circuit feed.
Ⓑ - Radio Antenna Motor Feed.

Copyright (c) 2001 Mitchell Repair Information Company

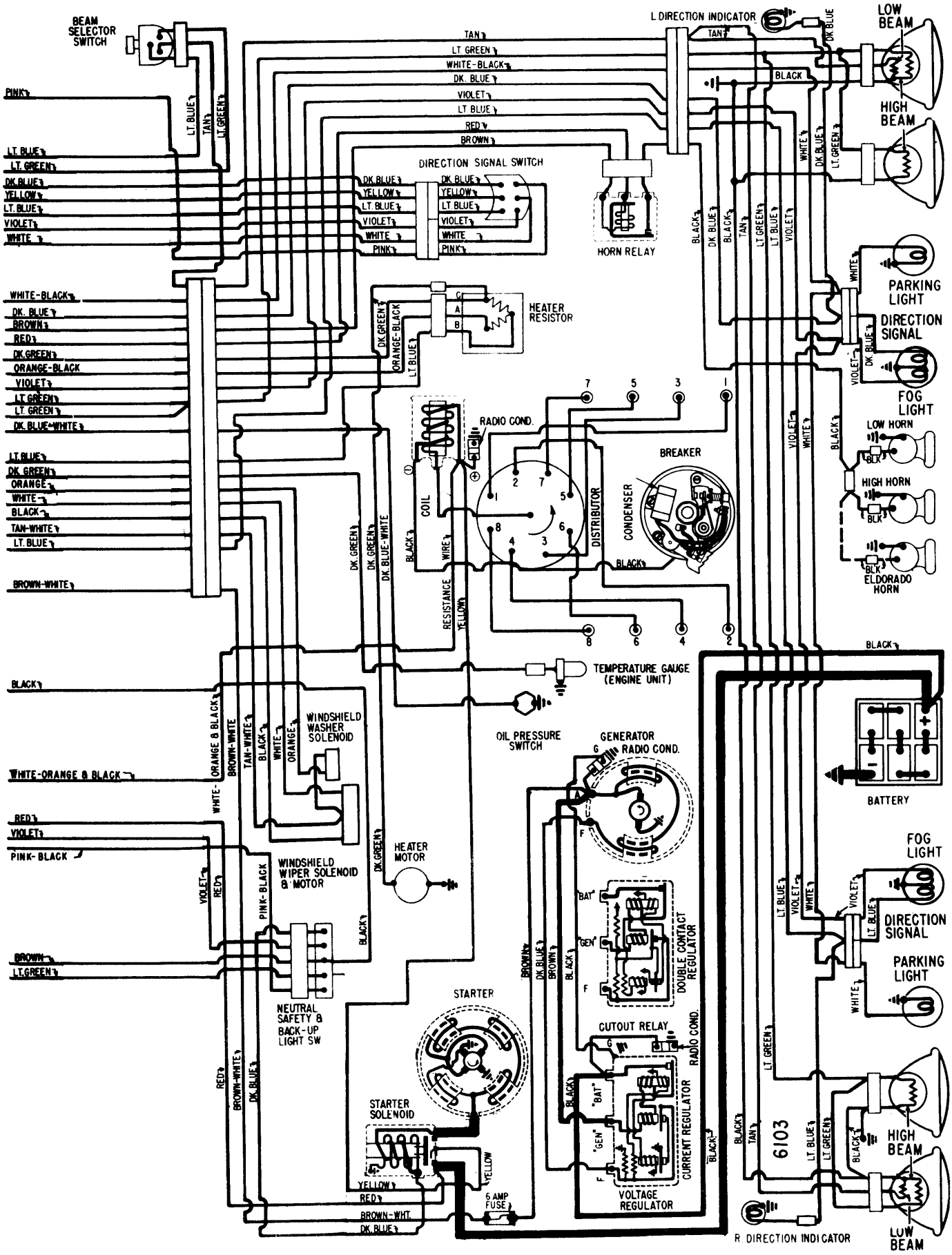

Ⓓ - Instr. Panel Right Direction Indicator (when used)

Copyright (c) 2001 Mitchell Repair Information Company