1960 Studebaker V8

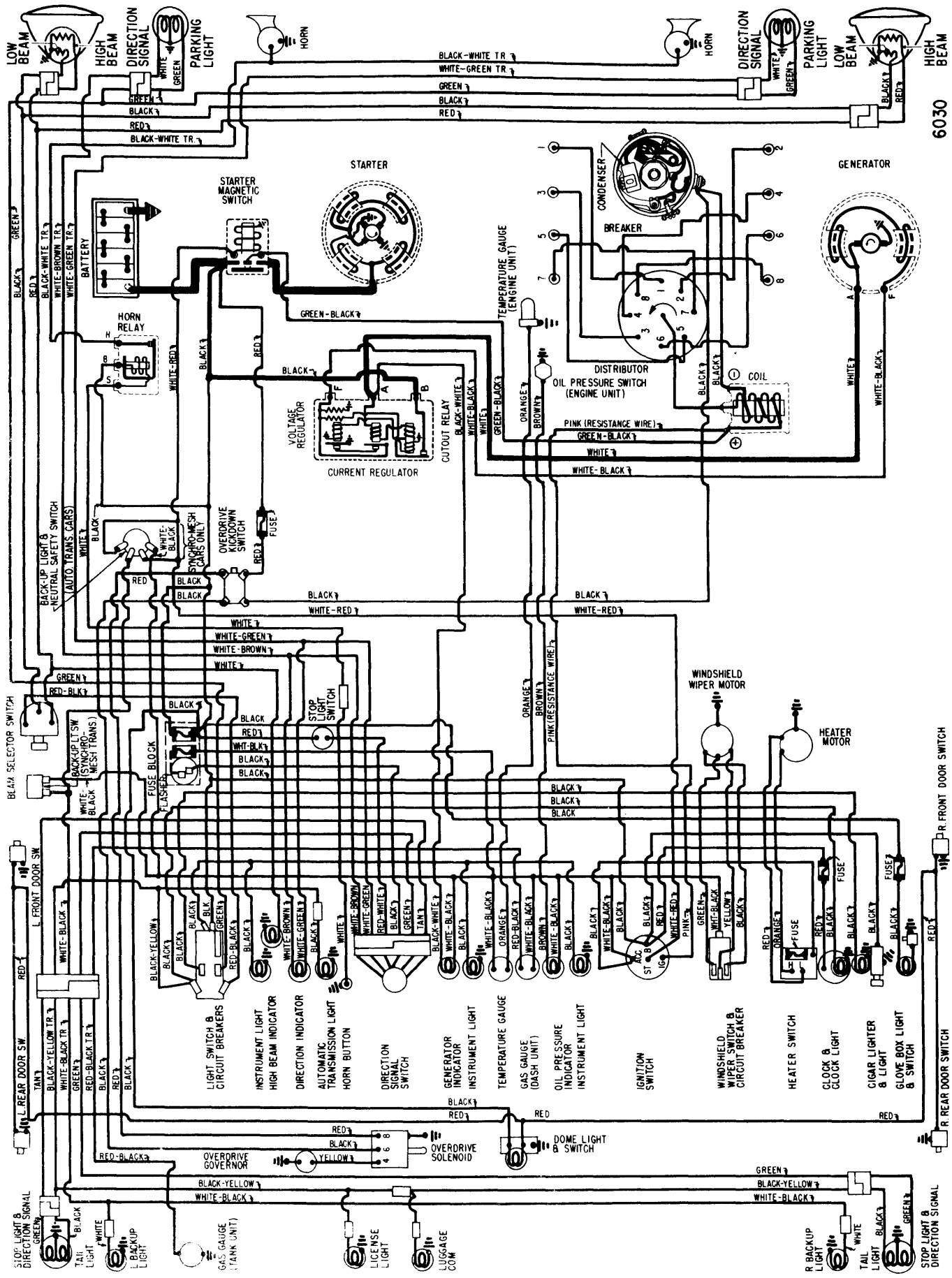

Copyright (c) 2001 Mitchell Repair Information Company