1960 Chevrolet 6

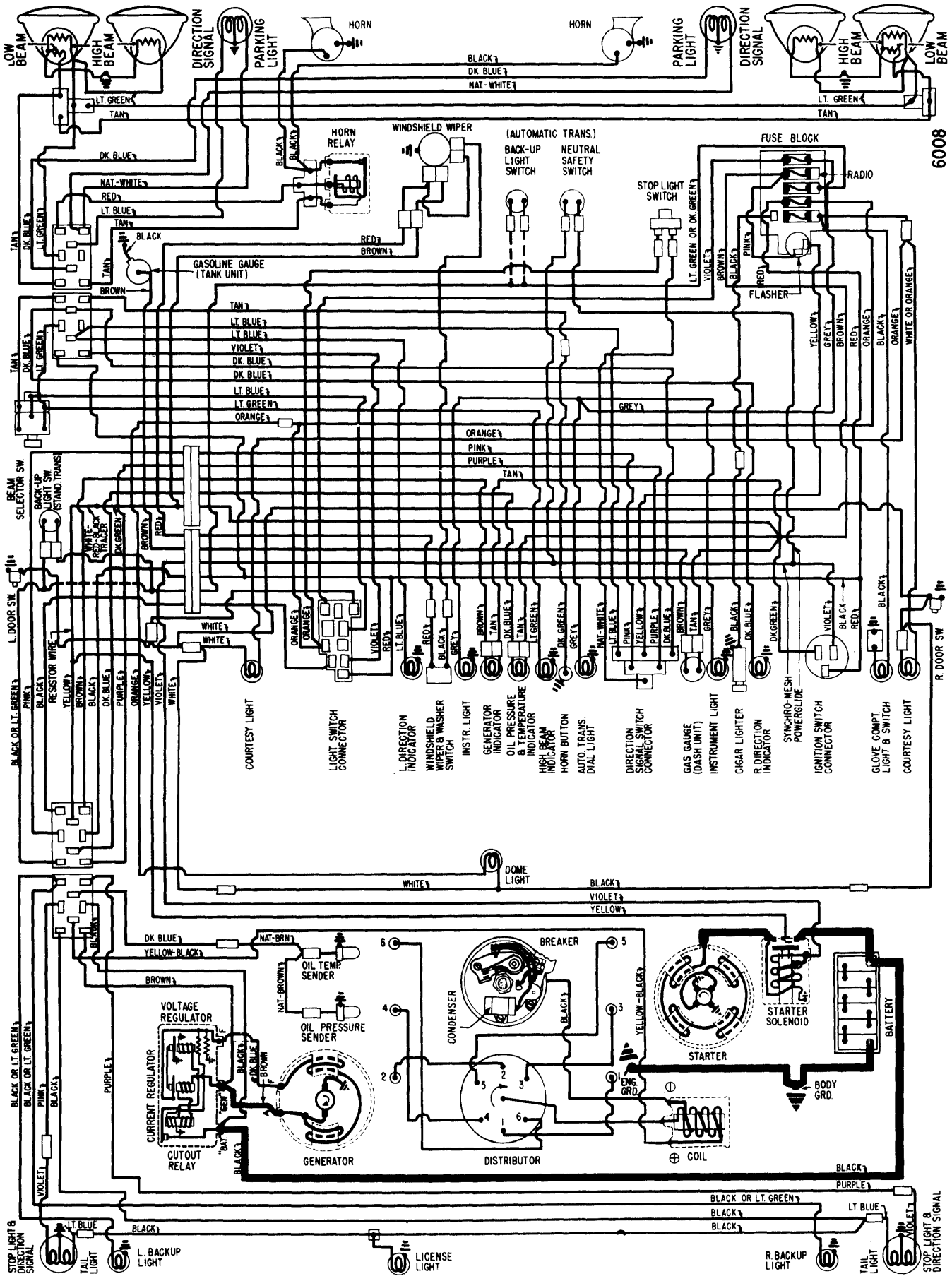

Copyright (c) 2001 Mitchell Repair Information Company