Ignition Systems

IGNITION SECONDARY QUICK CHECK CHART

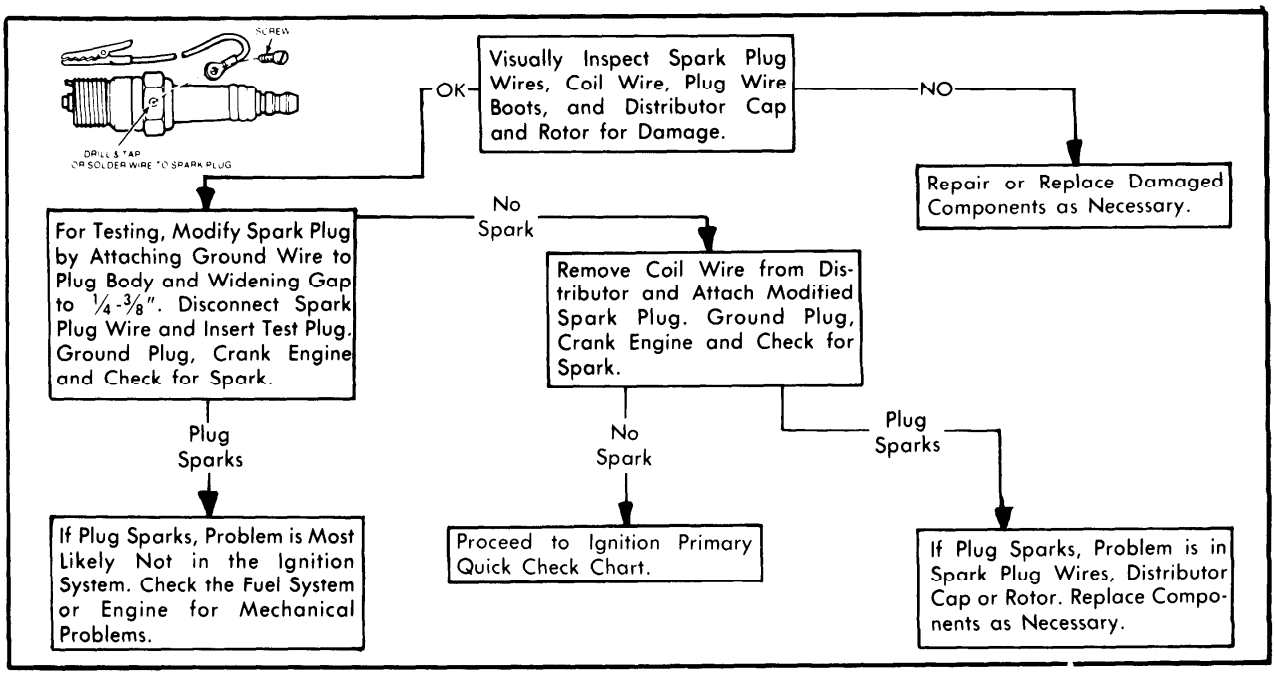

IGNITION PRIMARY QUICK CHECK CHART

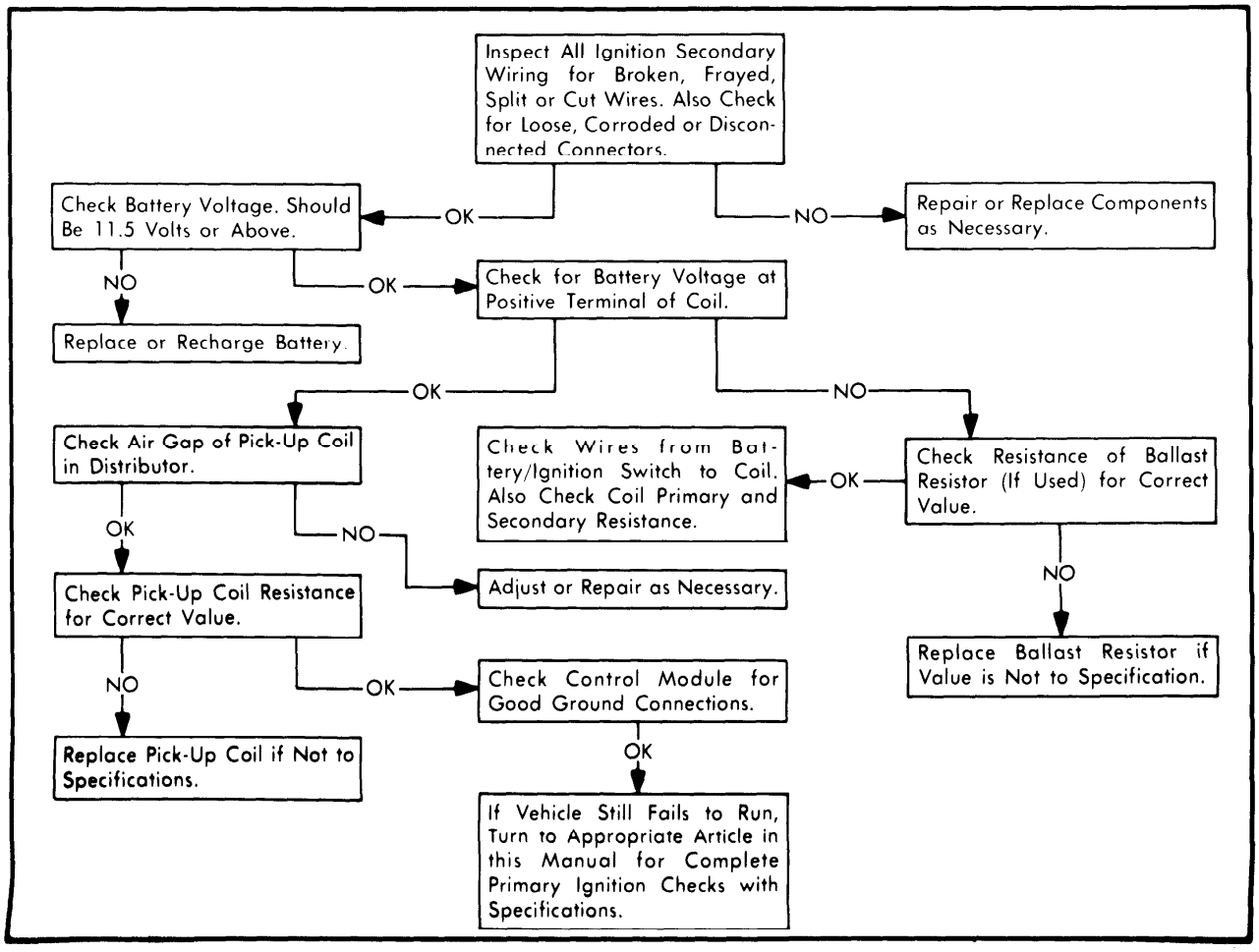

Copyright (c) 2001 Mitchell Repair Information Company