JEEP TAILGATE WINDOW DEFOGGER

Jeep
Cherokee
Wagoneer

DESCRIPTION

A heated tailgate window defogger system is available on Cherokee and Wagoneer models. The system consists of grid and buss bars fused to inside of glass, a control switch, pilot light, and timer relay. The grid feed wire is attached to the timer relay located inside tailgate. The timer relay receives its power from the fuse panel power tailgate terminal. A 30 ampere fuse protects the circuit.

OPERATION

Actuating the defogger control switch on instrument panel (with engine running because of high current draw) causes defogger relay contacts to close. A timer, enclosed in relay case, will allow the defogger to operate for about 8 to 12 minutes, depending upon the ambient temperature. If the control switch or ignition switch is turned off then the system will be deactuated. A pilot lamp on the instrument panel indicates the system is in operation.

TESTING

CONTROL SWITCH

Turn ignition switch "ON" and press defogger switch. Disconnect the wiring harness at connector under dash. Connect a test lamp (12 volt) from purple wire to ground and test lamp should light. Turn defogger switch off and test lamp should not light.

RELAY

1) Remove tailgate trim panel and access hole cover, then disconnect three-wire connector at relay. Connect a jumper wire from accessory terminal on fuse panel to "X" terminal on relay. Connect another jumper wire from accessory terminal on fuse panel to red wire (with tracer) terminal on switch. Connect a third jumper wire from purple wire terminal of switch to "P" terminal on relay.

2) Connect a 12-volt test lamp from "L" terminal of relay to a good ground. With ignition switch in "ACC" position, test lamp should not light. Press switch on, lamp should light and remain on for 8 to 12 minutes.

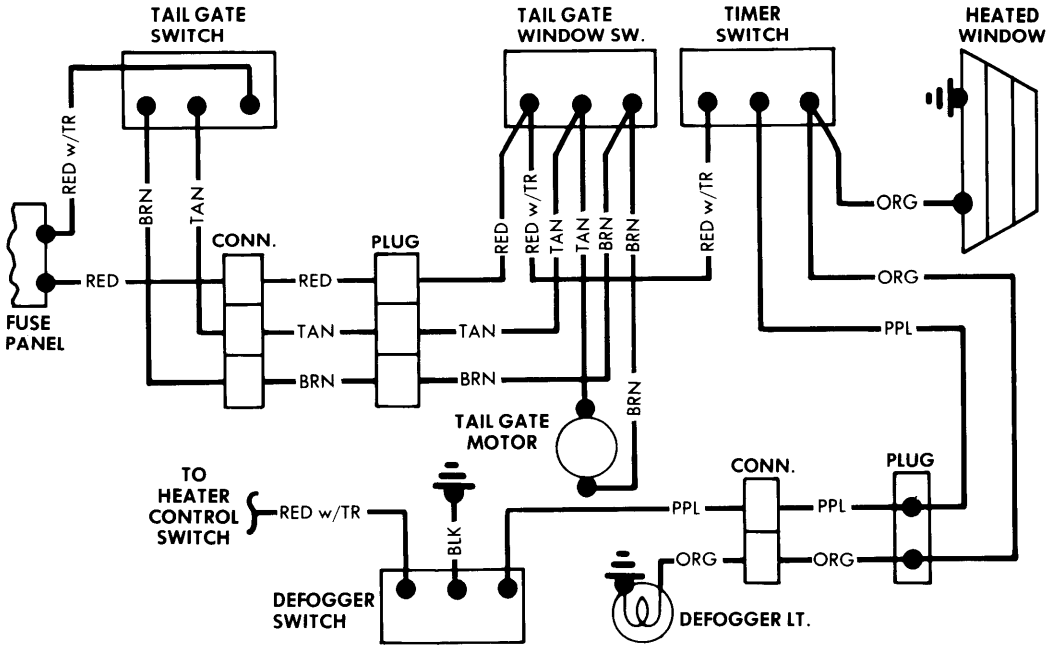

Fig. 1 Wiring Diagram for Heated Rear Window

Copyright (c) 2003 Mitchell Repair Information Company