GENERAL MOTORS WINDOW DEFOGGER GRID

DESCRIPTION

The heated rear window defogger uses a heating grid baked to the inside of the rear window. Window heat is controlled by a control switch and relay-timer. When the defogger is operating, an indicator lamp will light to show the system is on. Current feed to the defogger is through a circuit breaker (30 amp. on most models), and power to the control switch is through a fuse in the fuse panel.

OPERATION

The heated rear window operates when the ignitionswitch is on and the control switch is moved to "ON". The timer relay will keep the window on for 5-10 minutes, or until the ignition is turned off. The window grid draws approximately 20 amps. On air conditioned models, the blower fan is connected by a relay to the window grid to prevent excessive current draw.

TESTING

NOTE — *See appropriate General Motors Chassis Wiring Diagrams in WIRING DIAGRAMS Section for system wiring diagram.*

SYSTEM TEST

1) Check that all in-line fuses or circuit breakers are operational. Turn ignition and defogger control switch to "On" position. Rear window glass should feel warm to touch after three minutes of operation. If glass does not warm, use a test lamp or ohmmeter and check for 12 volts at feed wire to window grid at rear connector. The location of feed wire connector varies. It will be found either near the left or right upper corner of glass or in the rear compartment by the rear seat back,and will be either a Purple or Black wire depending on model. If voltage is correct, and window is not warm, check rear window grid wires as described in this story. If voltage is not correct, check wiring harness, control switch or timer/relay.

2) Test defogger control switch for shorts and replace switch if it is shorted. Some switches must be removed from panel to perform check. Check system for correct operation. If system is inoperative install a new relay/timer (locations vary) and check operation of system. If system does not operate, locate and repair short in the wiring circuit.

WINDOW GRID WIRES

1) Shine a strong light through grid from inside vehicle. Check for broken grids which will appear as brown spots.

2) Run engine at idle, turn control switch to "On", the indicator light should come on.

3) Using a 12 volt DC voltmeter, contact wide silver strips on back window. Reading should be 10-13 volts. If voltage is lower, window grid ground connection (pigtail on passengers side) is loose.

4) Contact a known good ground with meter negative lead. Reading should not change.

5) With negative lead connected to ground, touch each grid line at its midpoint with meter positive lead. A reading of about 6 volts indicates grid line is good. A zero volts reading indicates the grid is broken between the mid-point and the hot side. A 12 volts reading indicates the grid is broken between the mid-point and ground, or that ground connection is loose.

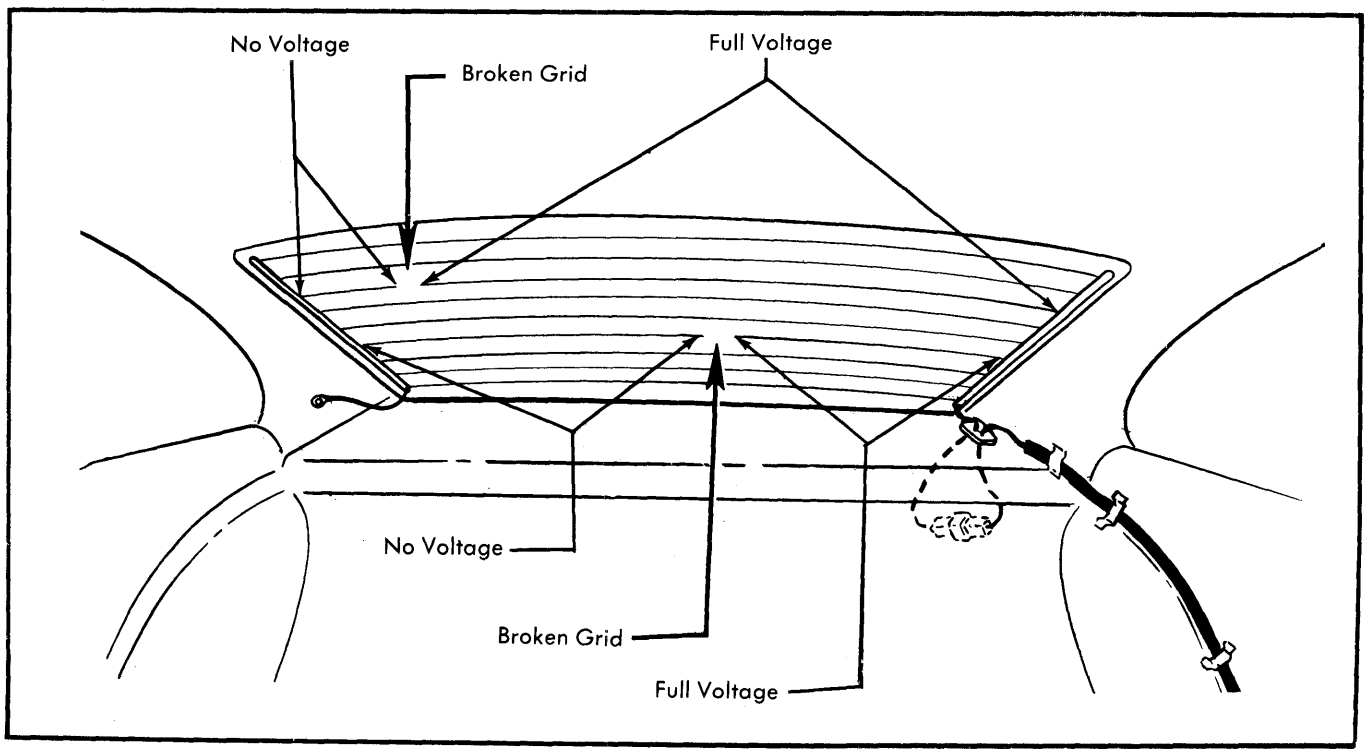

Fig. 1 Voltage Test with Broken Grid Wires

Copyright (c) 2003 Mitchell Repair Information Company

GENERAL MOTORS WINDOW DEFOGGER GRID (Cont.)

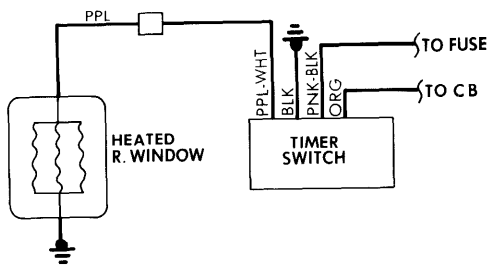

Buick Electra and LeSabre

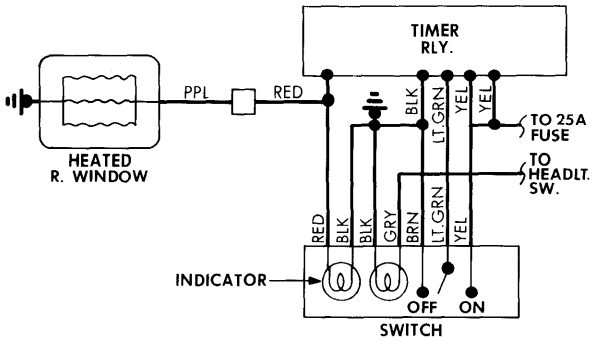

Cadillac DeVille and Fleetwood

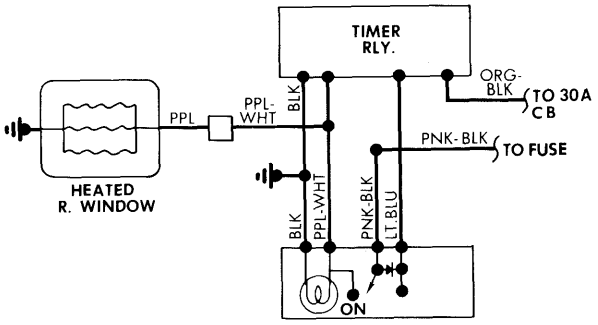

Buick Century

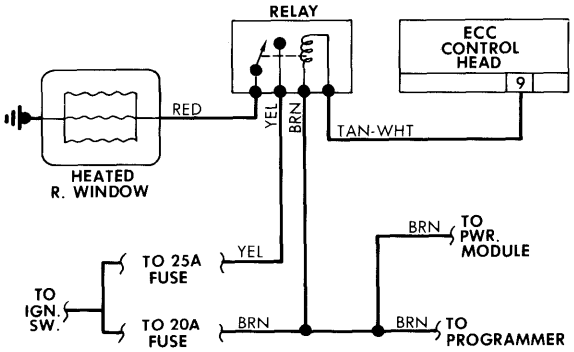

Cadillac Eldorado and Seville

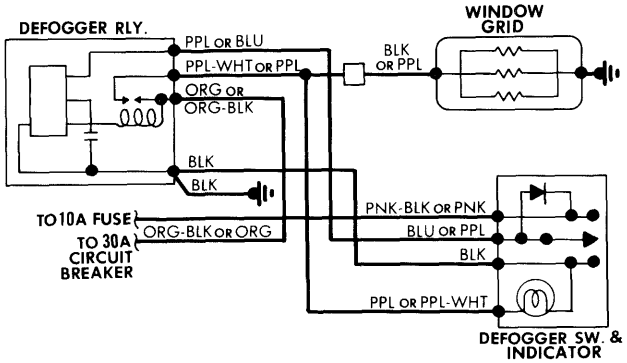

All Other GM Models

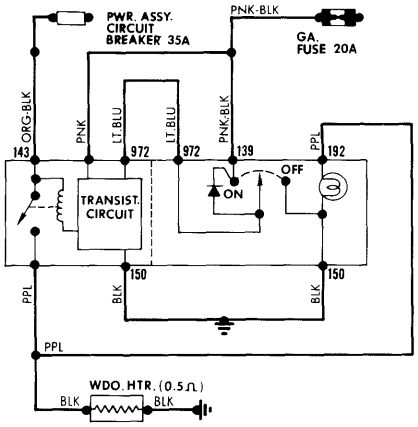

Chevrolet Corvette

Fig. 2 General Motors Electric Window Defogger Wiring Diagrams

Copyright (c) 2003 Mitchell Repair Information Company