ALL CAR MODELS

ADJUSTMENT

CAUTION — *Correct wheel bearing adjustment is very important on vehicles with disc brakes, as too much end play in bearings will cause disc wobble and brake damage.*

NOTE — *On all cars with disc brakes, caliper assembly must be removed before disc and hub in order to work on wheel bearings. Caliper-to-disc clearance is very critical on some cars. Be sure to observe all cautions. It is not necessary to disconnect brake lines to remove caliper assembly. Wire caliper assembly up out of way, but do not hang from brake line.*

AMERICAN MOTORS

All Models — Raise and support front of car. Remove hub cap, grease cap, "O" ring, cotter pin and locking nut. Tighten spindle nut to 25 ft. lbs. while rotating wheel by hand. Loosen spindle nut 1/3 turn. While rotating wheel, tighten spindle nut to 6 INCH lbs. Install locking nut on spindle nut and install new cotter pin.

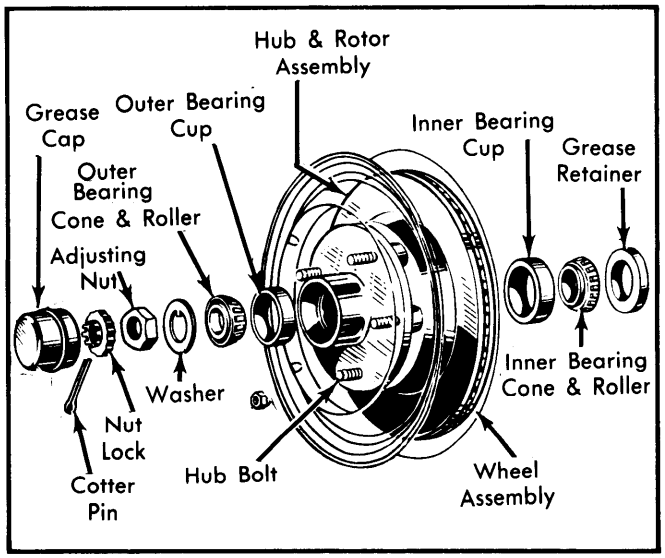

Fig. 1 Wheel Bearing Exploded View (Typical)

CHRYSLER CORP.

Except Omni & Horizon — Tighten adjusting nut to 240-300 INCH lbs. while rotating wheel. Stop rotation and back off adjusting nut to completely release bearing preload. Finger tighten adjusting nut. Position locking nut over adjusting nut. Install cotter pin. Adjustment should provide .001-.003" end play.

Omni & Horizon (Front) — No lubrication or adjustment is necessary for permanently sealed front bearing. Replace hub nuts and washers when removed, as they are not re-usable. Tighten new nuts to 185 ft. lbs. Install new bearing any time hub is removed.

Omni & Horizon (Rear) — While rotating wheel by hand, tighten adjusting nut to 240-300 INCH lbs. Stop rotation and back off adjusting nut to release bearing preload completely. Finger tighten adjusting nut. Position locking nut over adjusting nut and install new cotter pin. Adjustment should provide .001-.003" end play.

FORD MOTOR CO.

All Models — Raise vehicle and remove wheel cover and grease cap. Remove cotter pin and locking nut. Loosen adjusting nut 3 turns and rock wheel, hub and rotor assembly in and out several times. Rotate wheel, hub and rotor assembly tightening the adjusting nut to 17-25 ft. lbs. Loosen nut 1/2 turn and retighten to 10-15 INCH lbs. Reinstall locking nut on adjusting nut and insert new cotter pin.

GENERAL MOTORS

Riviera, Eldorado & Toronado (Front) — The sealed front wheel bearing requires no lubrication or adjustment. Remove and install carefully, without prying, pounding or use of heat. Darkened areas of bearing are normal and are not a cause for bearing replacement. Torque nut to 175 ft. lbs.

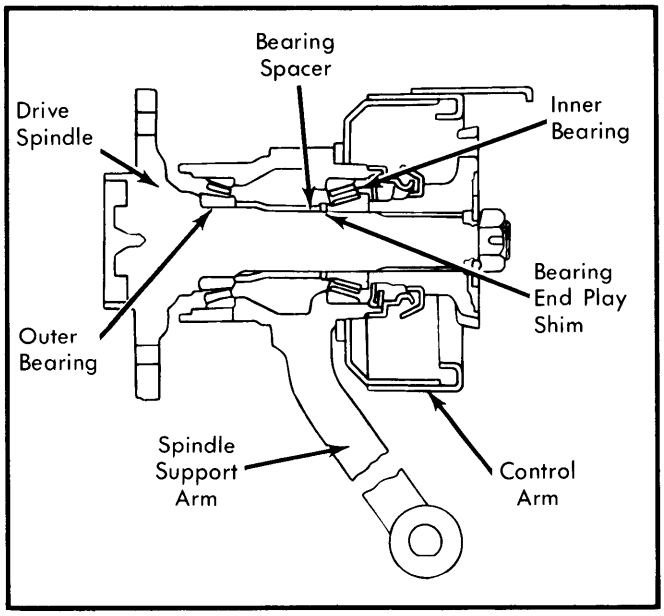

Fig. 2 Corvette Rear Wheel Bearing Adjustment

Corvette (Rear) — **1)** Bearing end play is controlled by a solid tubular spacer and a selected shim. See *Fig. 2*. To check end play, raise vehicle using care not to bend strut rods. Disengage bolt lock tabs and disconnect outboard end of axle drive shaft from wheel spindle flange.

2) Mark camber cam relationship to bracket. Loosen and turn camber bolt until torque control arm is forced outward. Remove wheel and tire assembly. Mount dial indicator (J-8001) on torque control arm adjacent surface, resting pointer on flange or spindle end.

3) Move brake disc in and out and check for .001-.008" end play. If end play is greater than specification, reduce shim thickness. If no end play exists, add .003" shim to original shim and recheck end play.

All Other Models — Raise car. Remove hub cap, dust cap, and cotter pin. Tighten spindle nut to 12 ft. lbs. while spinning wheel by hand. Back off nut until just loose (1/4 to 1/2 turn). Hand tighten spindle nut until snug, then loosen 1/12 turn (1/2 flat) and insert cotter pin. Adjustment should provide .001-.005" end play.

Copyright (c) 2003 Mitchell Repair Information Company